For service, contact the store where you
purchased the device.

Instructions for use

TRYCHO hairdresser's washstand black



Rev. A/08/2025

Warning.

1. Check that the voltage corresponds to the device specifications.
2. Do not use your wet hand to connect or disconnect the power source.
3. Do not damage the wiring or tamper with the circuit.
4. Do not use a wet cloth to clean the power switch, plug and other electrical parts of the unit
6. Ensure that children do not play near the washer without adult supervision.
7. Do not put your hand or foot in the crevices of the washer.
8. Make sure the plug is plugged in all the way so that it is fully inserted into the outlet, otherwise it may cause electric shock or fire due to overheating.
9. In case of abnormality or malfunction, immediately stop using and disconnect the power supply.
10. Do not expose the washer to direct sunlight.
11. Do not push or pull the washer on an uneven floor.
12. Do not stand on the washer.
14. Do not place the washer in wet places such as the bathroom to avoid electric shock or other malfunctions. The remote control should also be protected from contact with water.
15. Do not place the washer in areas where painting or varnishing work is taking place or where oxygen.
16. The device should not be used by people with physical limitations, sensory impairments, mental problems or inexperience.
17. If the plug is damaged, contact an authorized service technician.
18. People with osteoporosis or heart disease should not use the washer.
19. The power cord should be laid in such a way that people walking by will not trip and fall.
20. Unplug the power washer when not in use.

Technical data:

Dimensions: 1935× 706× 880 mm
Net weight: 89 kg Gross
weight: 133 kg Load
capacity: 140 kg
Filling material: sponge Skin:
PU/PVC
Input voltage: AC100~130V/220~240V,50/60Hz
Output voltage: DC 24V
Rated power: 60W

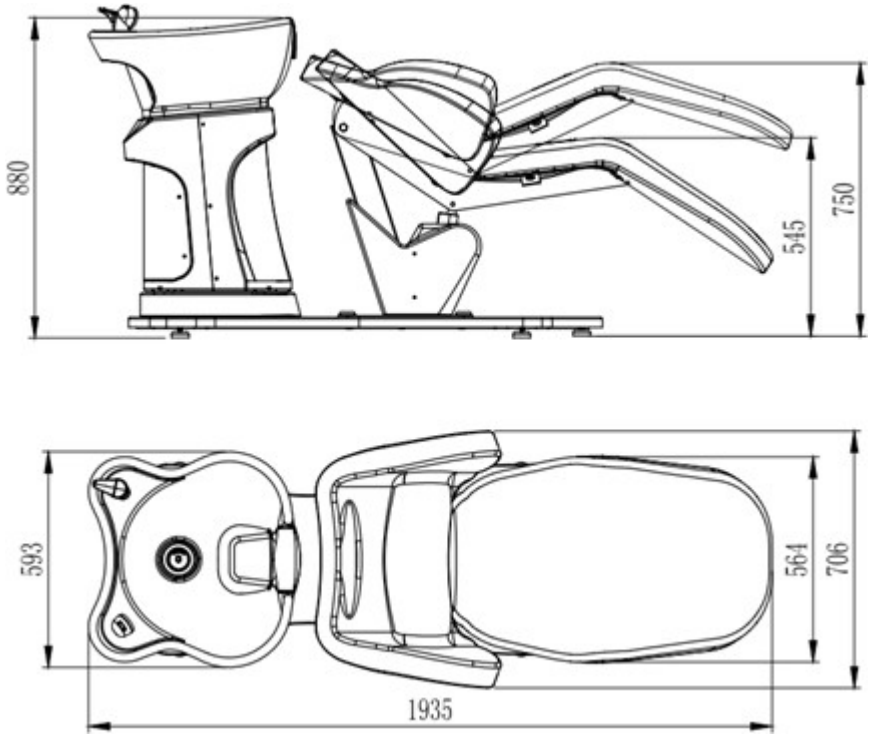

Mounting:

Name	Appearance	Specifications	Quantity
Seat	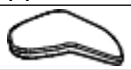		1
Faucet holder for hair wash			1
Handset shower handset			1
Fixing screw	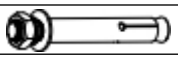	M8*100	4
Allen		Φ5	1
Mounting screw		Φ22*M8*25	2
Mounting screw		Φ22*M8*35	2

1. Use the mounting screws to install the seat as shown.

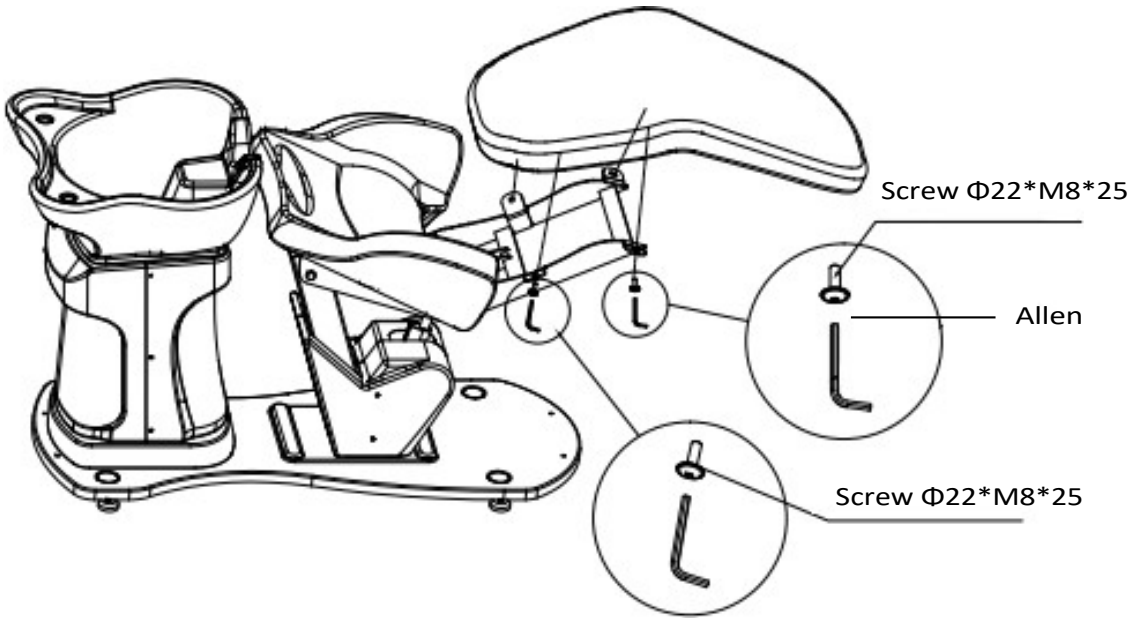

2. Remove the rear cover.

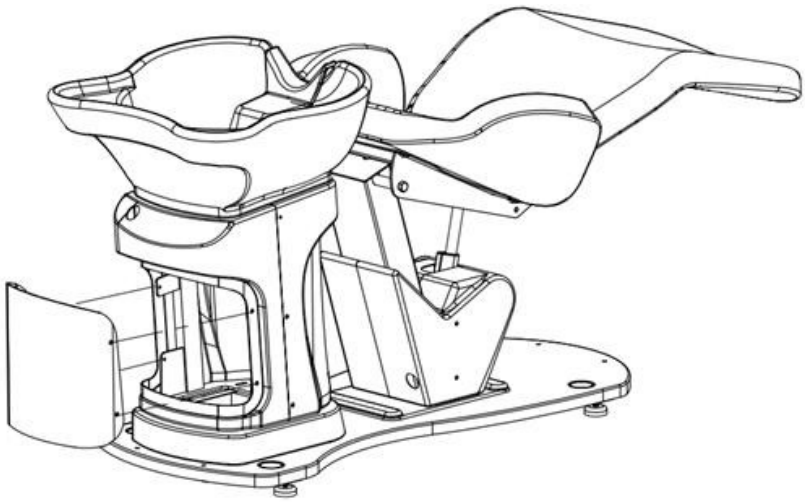

3. Install the barber wash battery as shown in the following picture.

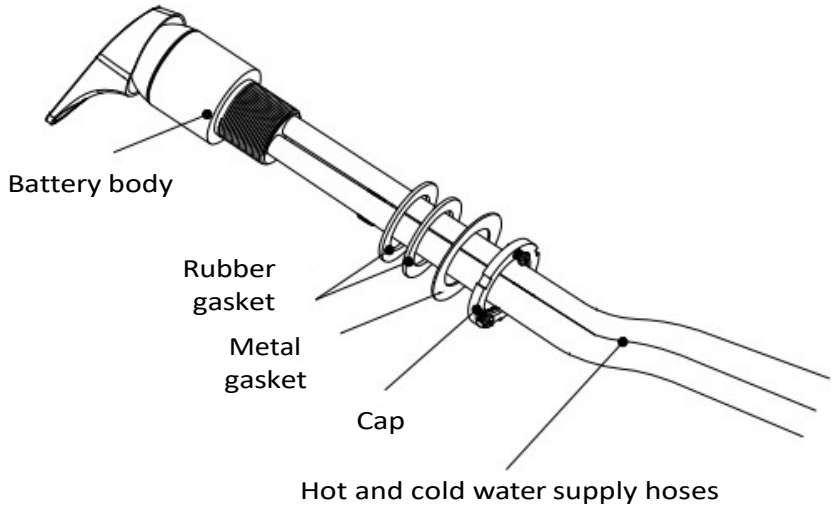

Unscrew the faucet body and install the faucet

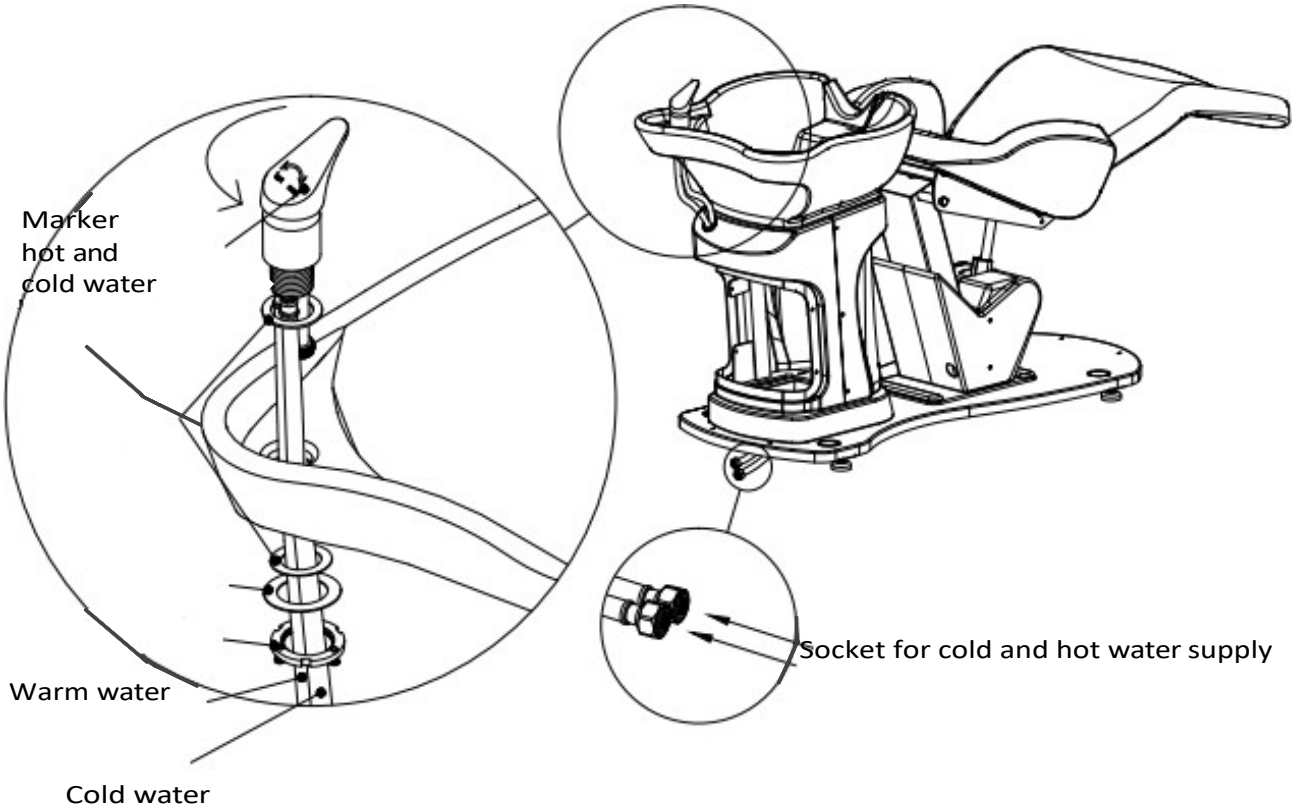

4. Mount the shower handset as shown below.

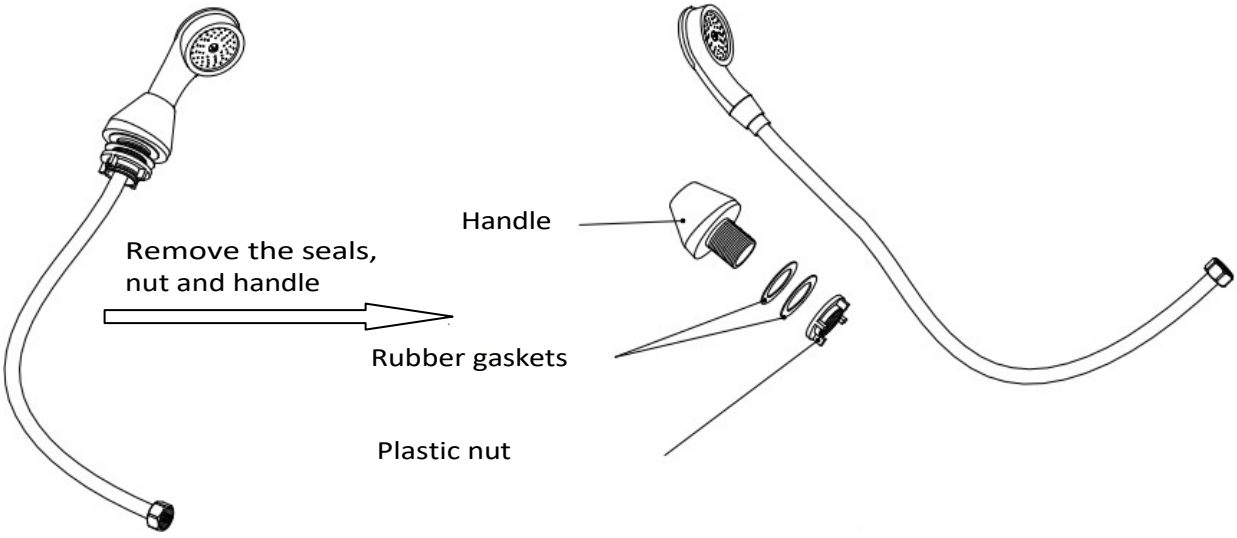

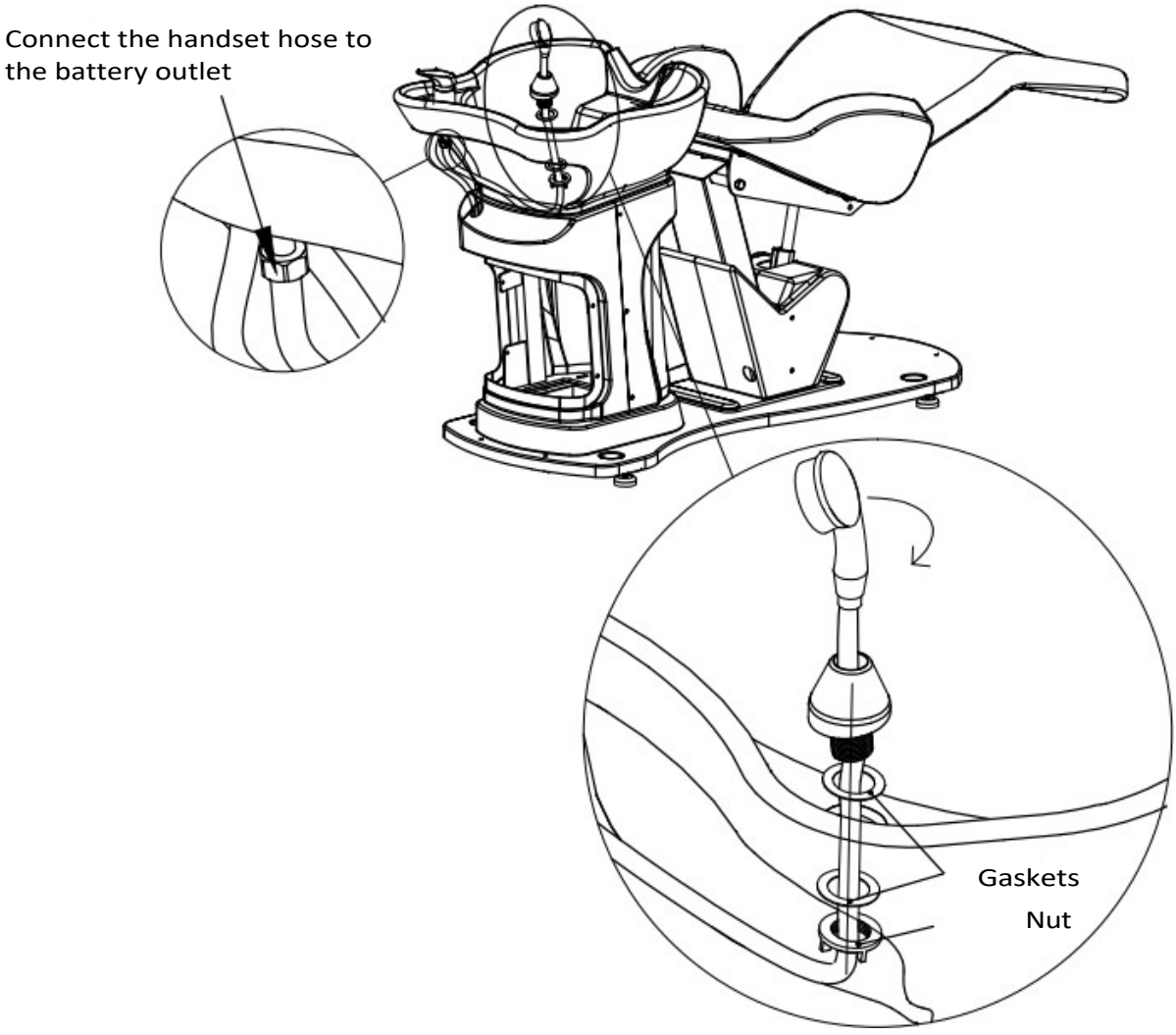

5. Install the drain in the drain hole. After installing the various components, attach the rear cover of the washer.

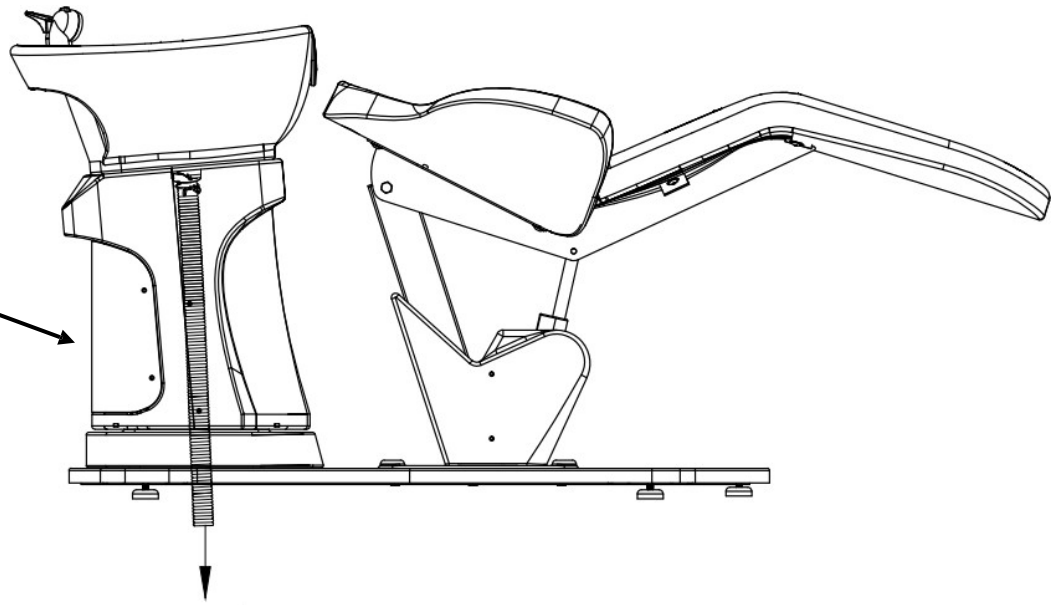

Diagram of the holes for the pipes:

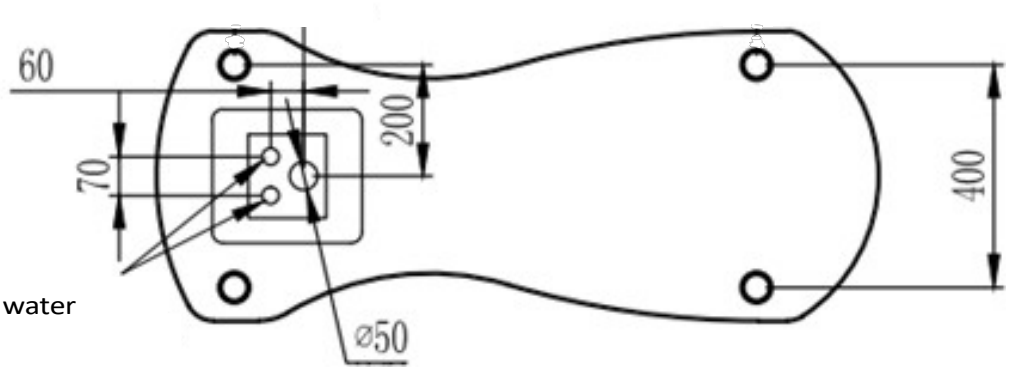

6. Tighten the fixing screws.

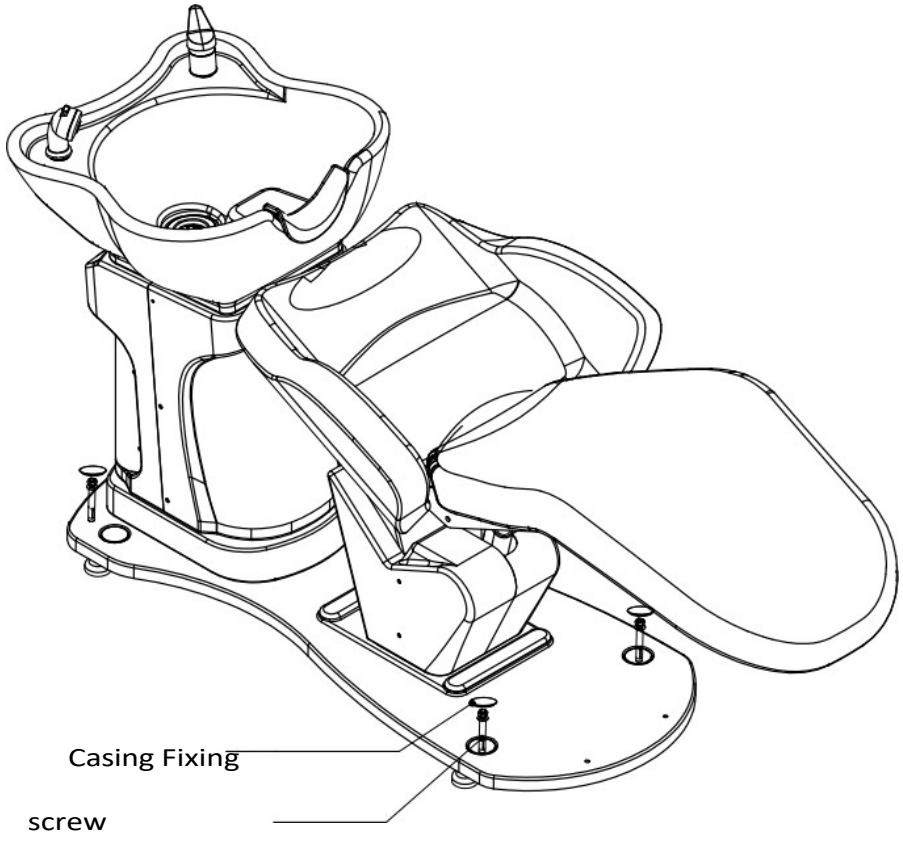

Foot pedal:

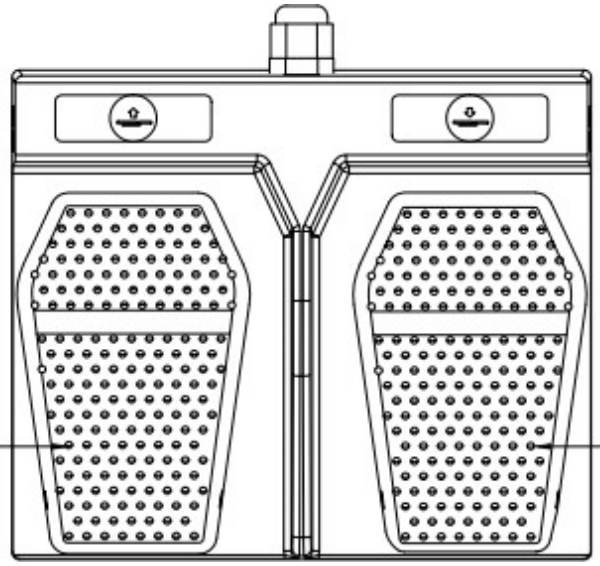

Maintenance:

1. Daily cleaning
   You can remove dust by using a soft, dry towel.
2. Removing tough dirt
   As you know, it is difficult to remove more difficult dirt with an ordinary dry towel. In this case, you can use a soft towel moistened with diluted,
   neutral detergent to clean the surface first. Then you can wipe it with a dry towel.
3. Prohibit the use of gasoline, thinners, kerosene or other solvents.
   These substances can damage the skin or cause corrosion and damage to the appearance of the product.
4. Storage and usage conditions
   Do not expose the product to strong sunlight or moisture. This could cause
   damage to the product.
5. Permitted conditions of use
   The product can be used at a temperature of -5°C to 50°C and a humidity of 45% to 85%.

SAFETY MEASURES

1. The device is a professional equipment for use in beauty parlors. Operation of the device only by qualified cosmetic personnel avoids undesirable consequences during treatment.
2. Do not disassemble the device or attempt to use it for purposes other than those indicated in this manual. All servicing and repairs must be performed only by an authorized service technician
.
3. Do not install or operate the device near liquids, wet places or with wet hands - so that no liquids get into the device.
4. Immediately remove the plug from the socket and contact an authorized service in the following cases: a) liquid has gotten into the device, b) the device emits a strange smell, smoke or makes strange sounds, c) the power cord has been damaged, d) the device has been knocked over or its housing has been damaged.
5. Do not lay any objects on the cables. Do not install the device where someone may step on the power cord.
6. For safety purposes, unplug the power cord from the outlet each time you finish working with the device.
7. Do not insert anything into the opening of the device. In case a foreign object gets into into the hole, remove the cord from the outlet and contact the distributor or manufacturer.
8. Do not place the device on an unstable cart, shelf or vehicle. If dropped, the device may be damaged.
9. In order to guarantee the established useful life of the device, it is recommended to keep an interval of one minute before pressing the power button again (between switching on and off and vice versa).
10. The power supply must comply with the specifications on the nameplate. Otherwise otherwise there is a risk of incorrect operation of the device its damage or even burning.

CAUTION:

1. In case of damage of power cable or other malfunctions, contact an authorized authorized service center - this will avoid danger.
2. This device can be used by children at least 8 years of age and by persons with reduced physical and mental capabilities and persons with inexperience and lack of familiarity with the equipment, if supervision or instruction on the use of the equipment in a safe manner is provided, so that the associated risks are understood.
3. The equipment is not intended for play by children. Do not allow children to play with the equipment.
4. Do not leave the equipment unattended when children or persons without sufficient knowledge regarding the use of the device are in its vicinity.
5. This electrical appliance is not a toy. Improper use of or contact with an electrical appliance may pose a health risk or lead to death, so use and store the appliance out of the reach of children.



DISPOSAL OF THE DEVICE

Dispose of used electrical appliances, fixtures and packaging to raw material reprocessing centers in accordance with environmental protection principles. Do not dispose of electrical appliances in household waste containers. Follow the rules for discarding this type of equipment. In order to protect the environment in accordance with Directive 2012/19/EC on waste electrical and electronic equipment, waste electrical equipment should be collected separately and then handed over to collection points for waste electronic and electrical equipment.

At the end of their useful life, as well as old devices contain full-value recyclable components, so they should be handed over for reprocessing. Therefore, they should be handed over to appropriate collection points .

STORAGE AND TRANSPORT

The device should be transported at temperatures in the range of (-) 20 °C to (+) 50 °C only in its original packaging. Store the device in a well-ventilated place with a relative humidity of no more than 75%. Operating temperature from (+) 10 °C to (+) 40 °C. During storage and transportation processes, the device must not be thrown or dropped, exposed to mechanical shocks or atmospheric agents.