For service, contact the store where you
purchased the device.

INSTRUCTIONS FOR USE

Ultrasonic cleaner ACD-7920



Rev. A/04/2024

Technical data:

Voltage	220 - 240 V 50Hz
Power	55 W
Vibration frequency	42 kHz
Dimensions	20.3 x 18.3 x 14.5 cm
Dimensions of tank	14.8 x 12.6 x 4.7 cm
Tank capacity	850 ml
Minimum liquid level	400 ml
Maximum fluid level	700 ml
Weight	1.09 kg
Timer	90 - 600 s

- Unplug the unit before filling. Do not exceed the "MAX" line to avoid overfilling.
- Do not fill the tank with abrasive or corrosive chemicals. It may cause it to leak, resulting in damage.
- Do not use the washer if the cable or plug is damaged. If damaged, contact a service center for inspection and repair. ☐
  Store the washer in a safe, dry and non-sunny place ☐ The washer should never be left unattended while plugged in.
- Do not use while bathing.
- Disconnect the washer from the power source after use.
- Do not immerse the washer in water to avoid electric shock ☐ Pour the water out through the spot on the washer indicated by the arrow.

Washer design and accessories:

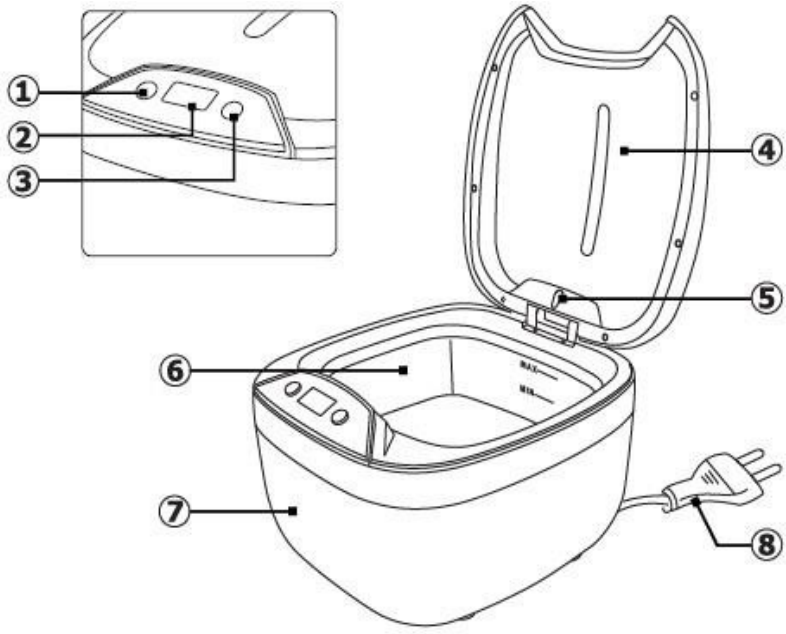

1. On/off button
2. Display
3. Time change button
4. Lid
5. LED light
6. Tank
7. Housing
8. Power cable

Accessories (optional)



CD stand



Watch stand

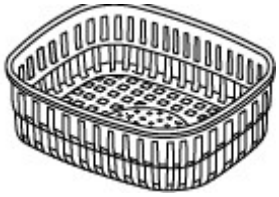

Basket

STORAGE AND HANDLING



1. Do not turn on the washer without water inside. Turning on the washer without water may damage the washer.
2. Do not overload the washer with continuous operation. After 30 minutes of continuous operation, leave the washer idle for another 10 minutes.
3. Do not leave water in the washer permanently You should pour the water or solution out of the washer after use. Leaving water or solution in the washer for a long time can damage it.
4. Take care of the outside of the washer. Wipe off any residual water or solution immediately. Use a damp towel to clean the washer. Wipe dry after washing.

INSTRUCTIONS FOR USE

1. Remove the lid. Put the products into the basket and then into the tank of the washer.
   For sharp objects that can damage the washer, be sure to use the basket.
   Also remember that the basket absorbs 30-40% of the ultrasonic energy of the washer.

2. Fill the tank with water. The water must cover the objects to be cleaned, but must not exceed the maximum liquid level.

3. Put the lid on, and then connect the washer to the power supply. The display will show 180. This is the default time for washing with the washer.

4. Set the selected time with the time setting key. Possible choices 180s, 300s, 480s, 600s 90s.

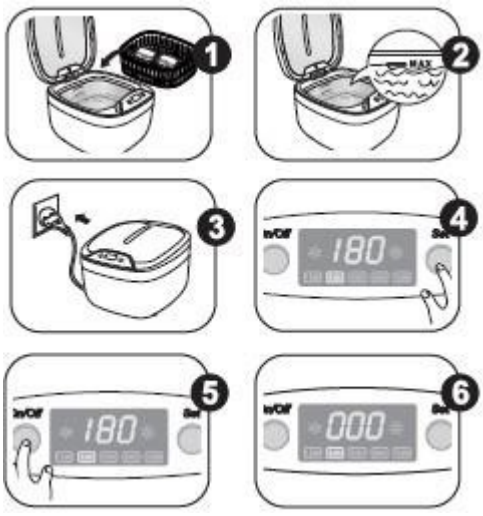

5. Turn on the washer with the switch. The cleaning process will start. The time will count down to 0.





6. When zero appears on the display, the washer will automatically stop.

7. If you want to finish cleaning before time, press the switch. If you need to repeat the cycle or increase the cleaning time, press the set button
time, select the appropriate time and press the switch to r
the device.



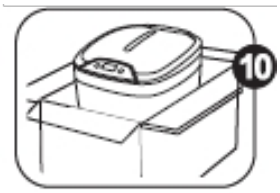

8. Unplug the appliance when you are finished. Open the lid and pull out the items to be cleaned.

9. Pour out the remaining water and wipe the device dry.

10. Store the device in a dry and cool place.

CLEANING METHODS



Ordinary washing

Use water according to the instructions for use. Pour out the water after use



Washing in solution

Prepare the cleaning solution according to the manufacturer's recommendations. Be careful not to exceed the concentration of the solution. This can damage the seals in the washer, resulting in the risk of flooding electronic components. When you are finished, fill the washer with water, turn it on for 90 seconds, and then pour the residue out of the washer. This will prevent the washer from being damaged by prolonged contact with chemicals.



Washing in batches

For longer items that do not fit whole in the washer, it is recommended to wash them in batches. To do this, place one side of the item in the water or cleaning solution first, and then turn the item so that the other side of the item is in the water.

INSTRUCTIONS FOR USING OPTIONAL ACCESSORIES



Basket

The basket will work best for cleaning small items. Place the items in the basket, then insert it into the washer's tank. Try t o make sure that the items do not come into contact with each other.



Watch stand

Use the stand to keep your watch above the surface of the water when cleaning the bracelet.



CD stand

Use the stand when cleaning CDs/DVDs. The rack can hold 2 discs at a time.

PRODUCTS NOT SUITABLE FOR CLEANING IN AN ULTRASONIC CLEANER

- Delicate jewelry (pearls, emerald, ivory items, beads, seashells, agate).
- Welded, coated and glued items
- Other items such as wood, coated glass, ceramic products, camera filters.

SAFETY MEASURES

1. The device is a professional equipment for use in beauty parlors. Operation of the device only by qualified cosmetology personnel avoids undesirable consequences during treatment.
2. Do not disassemble the device or attempt to use it for purposes other than those indicated in this manual. All servicing and repairs must be performed only by an authorized service technician.

3. Do not install or operate the device near liquids, wet places or with wet hands - so that no liquids get into the device.
4. Immediately unplug the device from the outlet and contact the authorized service in the following cases: (a) liquid has entered the device, (b) the device emits a strange odor, smoke or makes strange sounds, c) the power cord has been damaged, d) the device has been overturned or its housing has been damaged.

5. Do not lay any objects on the cables. Do not install the device in places where someone may step on the power cord.
6. For safety purposes, unplug the power cord from the outlet each time you finish working with the device.

7. Do not insert anything into the opening of the device. If a foreign object gets into the hole, remove the cord from the outlet and contact the distributor or manufacturer.
8. Do not place the device on an unstable cart, shelf or vehicle. If dropped, the device may be damaged.
9. In order to guarantee the established useful life of the device, it is recommended to keep an interval of one minute before pressing the power button again (between switching on and off and vice versa).
10. The power supply must comply with the specifications on the nameplate. Otherwise, there is a risk of incorrect operation of the device its damage and even burning.

CAUTION:
1. In case of damage to the power cord or other malfunctions, contact an authorized service center - this will avoid danger.
2. This device can be used by children at least 8 years old and by people with reduced physical and mental capabilities and those with inexperience and lack of familiarity with the equipment, if supervision or instruction on how to use the equipment in a safe manner is provided, so that the associated risks are understood.
3. The equipment is not intended for play by children. Do not allow children to play with the equipment.
4. Do not leave the appliance unsupervised when children or persons without sufficient knowledge in the use of the appliance are near it.
5. This electrical appliance is not a toy. Improper use or contact with the electrical appliance may pose a health risk or lead to death, so use and store the appliance out of the reach of children.



DISPOSAL OF THE DEVICE

Dispose of used electrical appliances, fixtures and packaging to raw material reprocessing centers in accordance with environmental protection principles. Do not dispose of electrical appliances in household waste containers. Follow the rules for discarding this type of equipment. In order to protect the environment in accordance with Directive 2012/19/EC Concerning waste electrical and electronic equipment, waste electrical equipment should be collected separately, and then handed over to collection points for waste electronic and electrical equipment electronic and electrical equipment.

At the end of their useful life, as well as old appliances contain full-value recyclable components, so they should be handed over for reprocessing. Therefore, they should be handed over to appropriate collection points.

STORAGE AND TRANSPORT

The device should be transported at temperatures between (-) 20 °C and (+) 50 °C only in its original packaging. Store the device in a well-ventilated area with a relative humidity of no more than 75%. Operating temperature from (+) 10 °C to (+) 40 °C. During storage and transportation processes, the device must not be thrown or dropped, exposed to mechanical shocks or atmospheric agents.