For service, contact the store where you
purchased the device.

Instructions for use

Gabbiano hairdressing sauna standing with active ozone



Rev. A/09/2025

Construction:

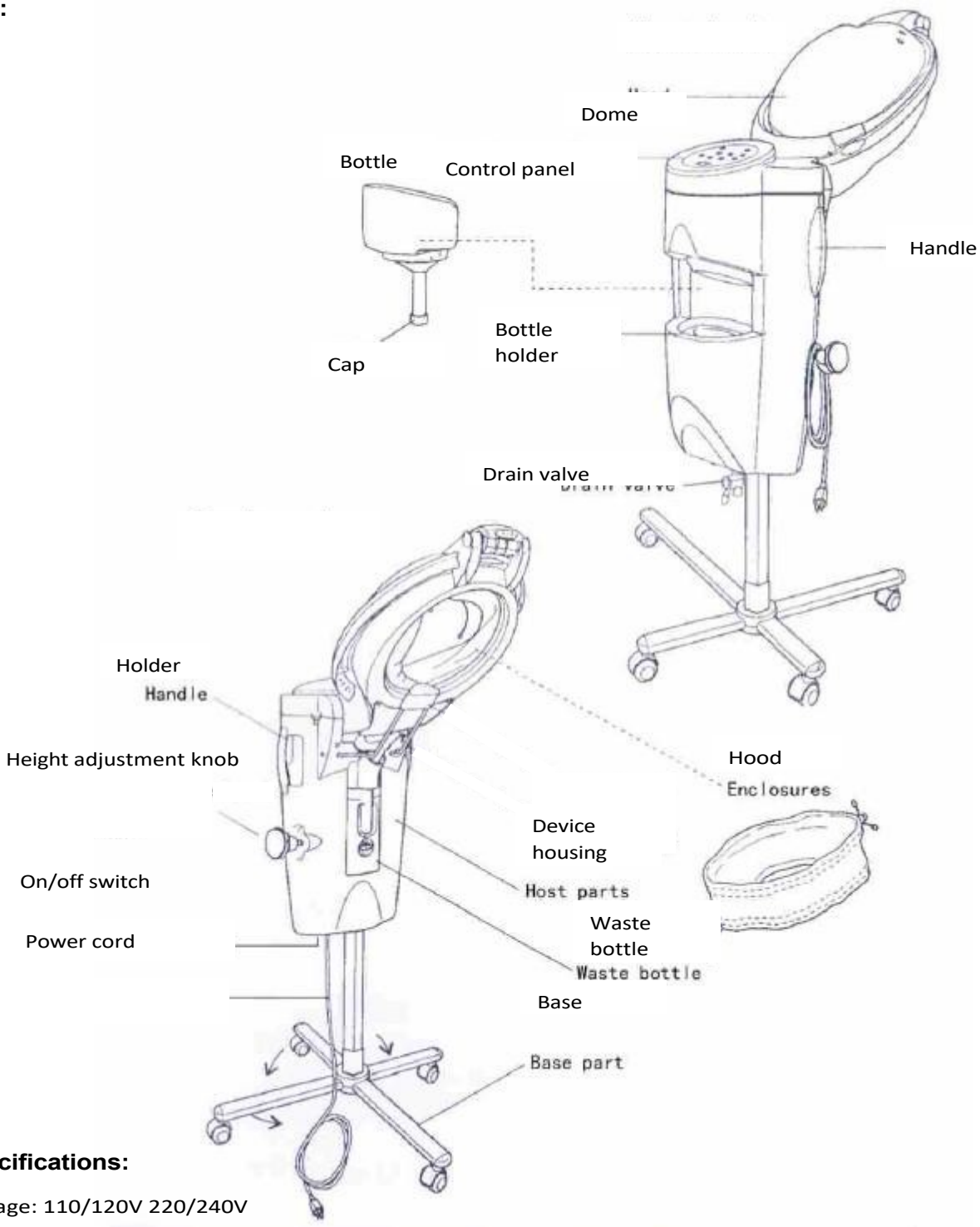

Specifications:

Voltage: 110/120V 220/240V

Current: 50/60Hz

Water tank capacity: 2000ml

Drain tank capacity: 350ml Weight of the

machine: 32kg

Height of unit: 165cm Base:

50cm x 70cm

Temperature range: 48-58°C

Time adjustment in the range of 0-60min

Assembly:

1. Remove all components of the device from the box.
2. Turn the height adjustment knob all the way counterclockwise.
3. Insert the column into the body through the square hole at the bottom of the unit, and then tighten.
4. Install the casters in the base of the unit, then slide the column into the base and tighten.

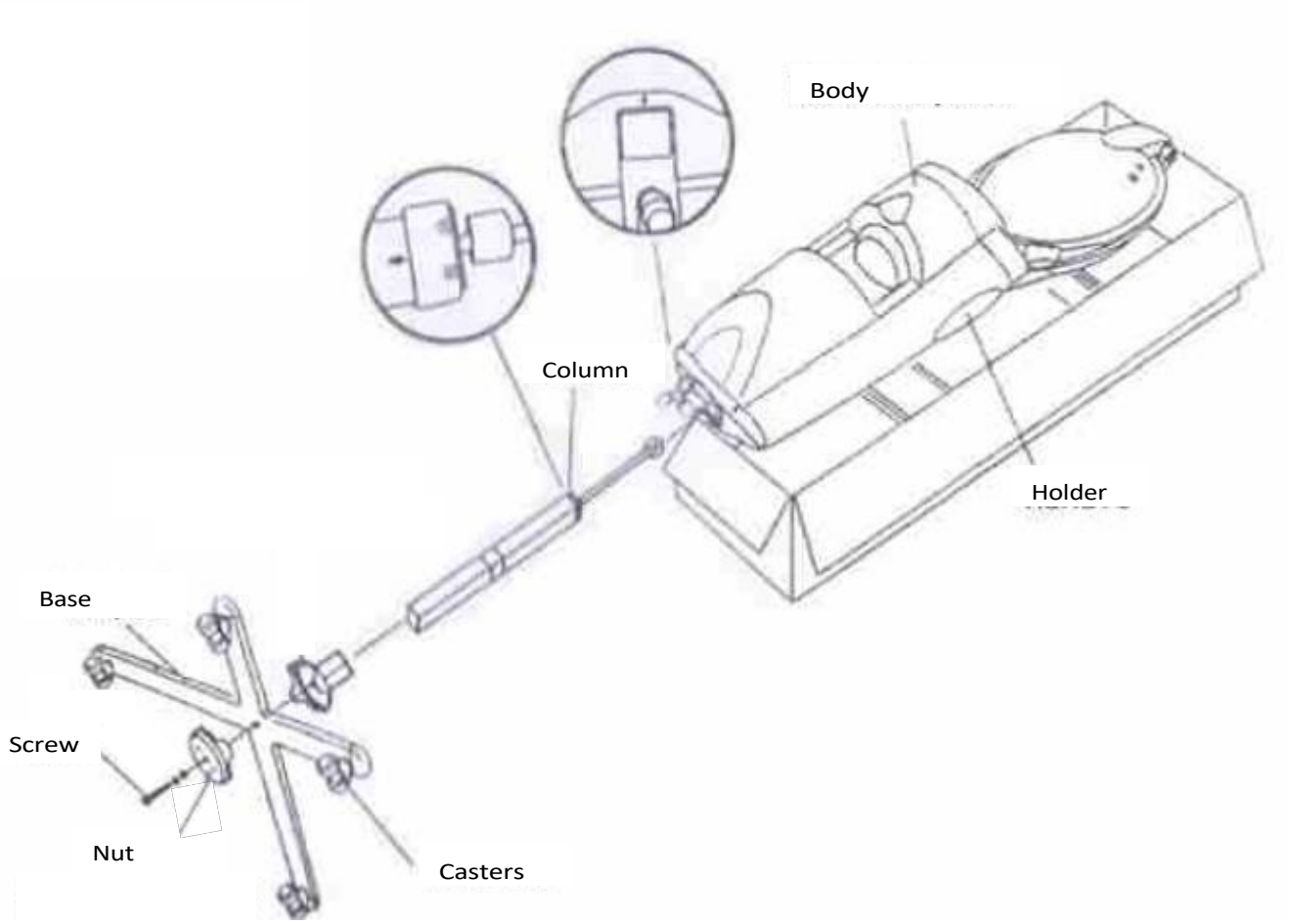

Attention.

- The unit must be grounded to prevent damage.
- Do not lean or sit on the device.
- Do not put your hands or other objects into the water bottle.
- During operation of the appliance, hot parts may cause burns
- The plug should be fully inserted into the outlet.
- Do not pull the appliance by the power cord - risk tipping over or damaging it.
- Do not bind the cord or place heavy objects on it to prevent electric shock or fire.
- To avoid electric shock, do not wet the power cord.
- Disconnect the plug if you do not intend to use the device for a long time.
- After prolonged use, limescale may form in the tank, affecting the atomization performance. It is recommended every two weeks to soak the device for 12 hours in 250 ml of white vinegar, then rinse with water several times until the vinegar smell is completely removed.
- After each use, open the drain valve to empty the remaining water in the tank.
- If the room temperature is lower than 12°C, use distilled water (no warmer than 40°C)
- The device should be carried using the handles. When moving, lift the dome, do not shake the device

Attenti
on!
While the unit is running, if you hear a beep and the screen flashes or no mist is produced, it means the water level in the tank is too low. You should turn off the device, empty the residual water and pour fresh water again. After about 3 minutes turn the power back on - the device should work properly. If the problem occurs frequently, contact service to check the sensor water level or thermostat.

Error codes:



→ Remaining operation time in cold blow mode: 59



→ Remaining operating time in cold blow mode: between 1:00 and



→ Remaining operating time in cold blow mode: between 2:00 and



→ The "sleep" time is more than five minutes. If the appliance will be dormant for a long time, unplug it from the outlet.



If the flashing message 'Ho' appears, it means that the device is running out of water in → . After topping up, the device will return to the operating state operation after 5 seconds.

Maintenance and cleaning:

- During oil treatments, perms or coloring, if any chemicals get on the device, wipe it off immediately with a damp cloth.
  Failure to do so may result in staining or discoloration of the device surface.
- Control / metal parts:
  If water splashes onto these parts, immediately wipe them with a dry cloth to avoid malfunction or damage to the unit.
- Plastic / gold / printed parts: Clean with a clean, soft cloth.
  You can use diluted neutral detergent to remove stubborn stains.
- Water bottle maintenance:
  Rinse bottles and detergent containers thoroughly to remove detergent residue. Residual detergent can cause the machine to malfunction.
- Do not use the following substances for cleaning: water, alcohol, gasoline, kerosene or other volatile chemicals.
- This appliance is not suitable for cold or hot perming with p e r m i n g chemicals, as it may cause an allergic skin reaction.

Waste Cylinder:

- Lower the hood cover to the bottom position.
- Turn the knob to the vertical position.
- Holding the bottom of the bottle, slide it out toward you.
- Pour the waste water out of the bottle, then follow the above steps in reverse order to reinstall the bottle.

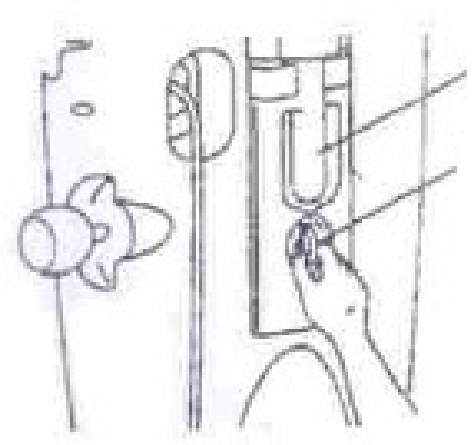

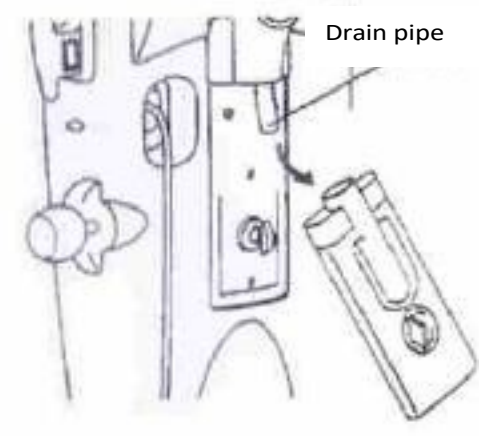

Draining water:

Drain the remaining water after use to prevent limescale buildup and avoid machine malfunction.

1. Remove the water bottle, pour out the remaining water, and then clean it thoroughly.
2. Turn the drain valve 90° clockwise to drain the remaining water from the machine (including hot water).

   *If you used detergent, be sure to rinse the tank thoroughly with clean water.

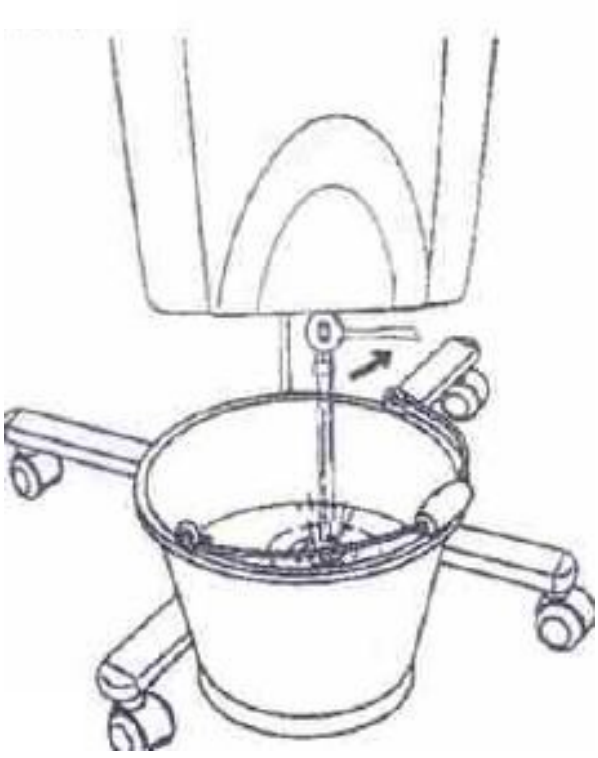

Attenti
on!

- Keep your hands and feet away from the outlet to avoid burns.
- Empty the unit of any remaining water after each day's operation.
- Lingering water can cause an unpleasant odor from the unit.
- In cold seasons, left over water in the unit can freeze.
- Empty the water to prevent damage to the appliance caused by freezing.

Control panel:

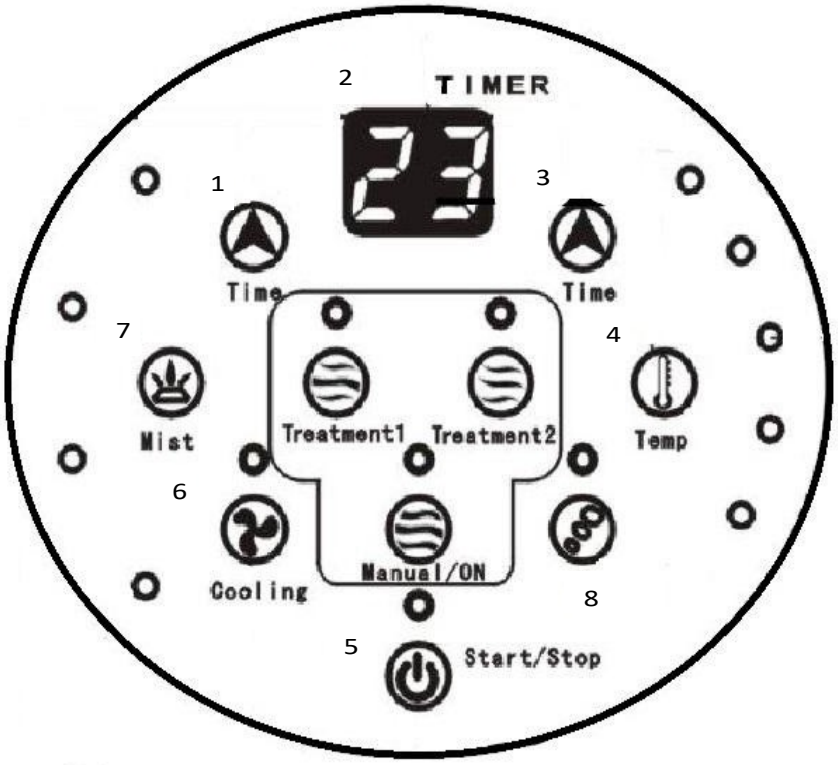

1. "TIME" button on the left side is responsible for increasing the operating time of the device (+10min).
2. "TIMER" display, indicates the selected time or the time left until the end of the treatment.
3. "TIME" button on the right side of the panel, is responsible for increasing the time in one-minute intervals.
4. The button responsible for the temperature level, next to it there are lights that indicate the temperature level.
5. Button "On" /" Off"
6. The button that starts cooling.
7. Mist spray button - as the intensity of the mist increases, the lights on the left will automatically flash from bottom to top.
8. Ozone switch.

Operating modes:

	Mist level	Temperature level	Time	Cooling time
Mode 1	4	4	8min	3min
Mode 2	3	3	10min	3min
Mode 3	2	2	12min	3min

Level	0	1	2	3	4	5
Temperature	Normal atmospheric temperature	45°C	47°C	49°C	51°C	53°C

Attention!

If the device has not been used for a long time, the actual temperature may be slightly higher than the displayed temperature.

Cover operation:

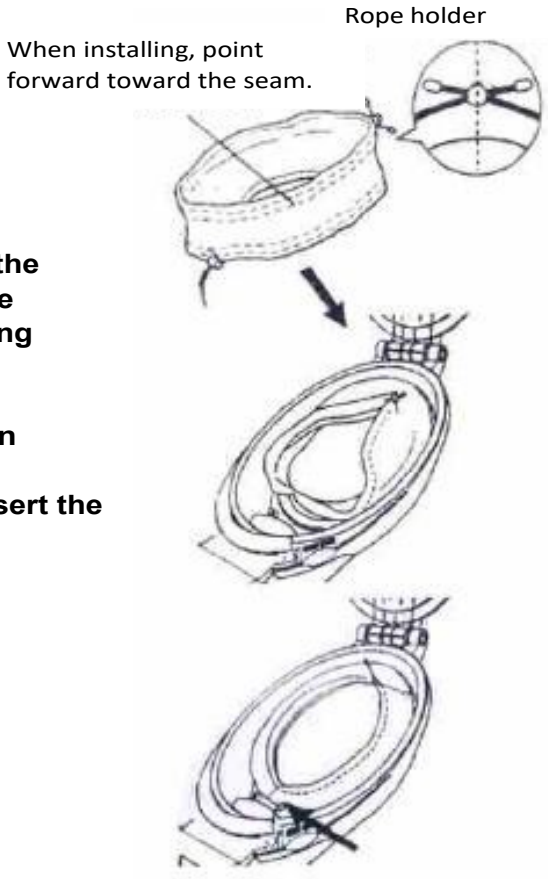

- **When installing, loosen the cord at the bottom of the housing and put it diagonally around the top of the hood. The other side of the cord has a lower locking mechanism**
- **Adjust the position of the top cord so that it is on the edge of the front of the hood.**
  Fully unlock the lower cord to make it easier to insert the client's head into the hood.

Setting the position of the treatment device:

1. Stand behind the client and adjust the operation mode.
    - Move the device so that it is behind the client.
    - Loosen the height adjustment knob in the customer's neck area (behind the middle part of the turban)

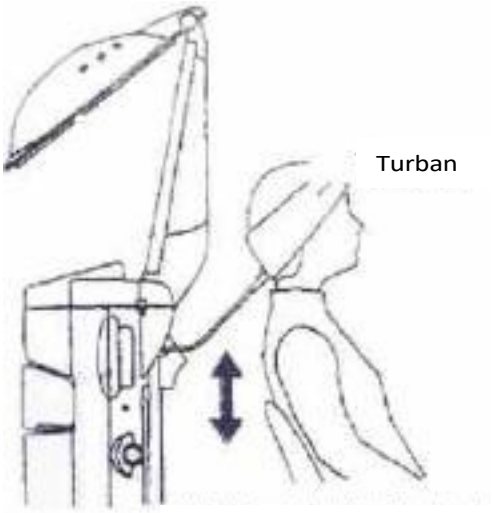

Height adjustment knob

2. Open the dome and place the dome support in the correct position relative to the client's head.

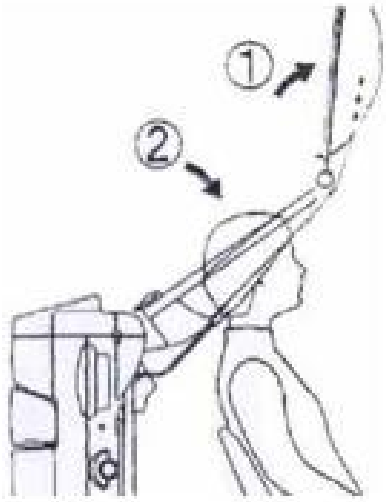

SAFETY MEASURES

1. The device is a professional equipment for use in beauty parlors. Operation of the device only by qualified cosmetic personnel avoids undesirable consequences during treatment.

2. Do not disassemble the device or attempt to use it for purposes other than those indicated in this manual. All servicing and repairs must be performed only by an authorized service technician.

3. Do not install or operate the device near liquids, wet places or with wet hands - so that no liquids get into the device.

4. Immediately remove the plug from the outlet and contact the authorized service in the following cases: a) liquid has gotten into the device, b) the device emits a strange smell, smoke or makes strange sounds, c) the power cord has been damaged, d) the device has been knocked over or its housing has been damaged.

5. Do not lay any objects on the cables. Do not install the device where someone may step on the power cord.

6. For safety purposes, unplug the power cord from the outlet each time you finish working with the device.

7. Do not insert anything into the opening of the device. If a foreign object gets into the hole, remove the cord from the outlet and contact the distributor or manufacturer.

8. Do not place the device on an unstable cart, shelf or vehicle. If dropped, the device may be damaged.

9. In order to guarantee the established useful life of the device, it is recommended to keep an interval of one minute before pressing the power button again (between switching on and off and vice versa).

10. The power supply must comply with the specifications on the nameplate. Otherwise, there is a risk of incorrect operation of the device its damage and even burning.

CAUTION:

1. In case of damage to the power cord or other malfunctions, contact an authorized service center - this will avoid danger.

2. This equipment may be used by children at least 8 years of age and by persons of diminished physical and mental capabilities and persons with inexperience and lack of familiarity with the equipment, if supervision or instruction on how to use the equipment in a safe manner is provided so that the associated risks are understood.

3. The equipment is not intended for play by children. Do not allow children to play with the equipment.

4. Do not leave the appliance unattended when children or persons without sufficient knowledge of the use of the appliance are in the vicinity.

5. This electrical appliance is not a toy. Improper use or contact with the electrical appliance may pose a health risk or lead to death, so use and store the appliance out of the reach of children.



DISPOSAL OF THE DEVICE

Dispose of used electrical appliances, fixtures and packaging to raw material reprocessing centers in accordance with environmental protection principles. Electrical appliances should not be disposed of in household waste containers. Follow the rules for discarding this type of equipment. In order to protect the environment in accordance with Directive 2012/19/EC concerning waste electrical and electronic equipment

Waste electrical and electronic equipment should be collected separately, and then handed over to collection points for waste electronic and electrical equipment.

At the end of their useful life, and old appliances contain full-value recyclable components, so they should be handed over for reprocessing. Therefore, they should be handed over to appropriate collection points.

STORAGE AND TRANSPORT

The device should be transported at a temperature in the range of (-) 20 °C to (+) 50 °C only in its original packaging. Store the device in a well-ventilated and relative humidity of no more than 75%. Operating temperature from (+) 10 °C to (+) 40 °C. During storage and transportation processes, the device must not be thrown or dropped, exposed to mechanical shocks or atmospheric agents.