For service, contact the store where you purchased the device.

Instructions for use

Gabbiano standing dryer 1600



Rev. A/09/2025

Construction:



Caution.

1. Use of the device by children and persons with impaired physical, sensory or intellectual abilities, as well as those without knowledge or experience in
   The use of this type of equipment is possible as long as they are closely supervised and trained in its safe use and potential risks
   arising from its use.

2. The device and the power cord should be inspected regularly to rule out defects and damage. If the device shows signs of damage, stop using it immediately, turn off the power supply and have it repaired by an authorized service technician.

3. The device must not be immersed in water or wet cleaned.
4. The air outlet grille heats up during the operation of the dryer, this condition is determined by its operation. Touching the grille may result in burns.
5. It is forbidden to interfere with the design of the device to change its parameters or construction.
6. Cleaning and maintenance must not be performed by children without adult supervision.
7. It is recommended to disconnect the power supply when the product is not in use.
8. Make sure that the dryer stands on a stable, level surface.
9. Avoid contact of the dryer with water.
10. Use the device only in dry and well-ventilated areas.
11. U n p l u g the device before cleaning, maintenance or moving it.

Use:

Connect the appliance to the power supply, then turn the timer to the right to set the appropriate operating time of the appliance (max 60min.) and turn the temperature control knob to set the appropriate temperature (max 70°).

Technical specifications:

1. Temperature control: up to 75°C
2. Time adjustment from 0-60min
3. Power 950W
4. Diameter of the opening: 39cm
5. Height: 113cm + 49cm

Assembly:

1. Connect the legs of the unit together.



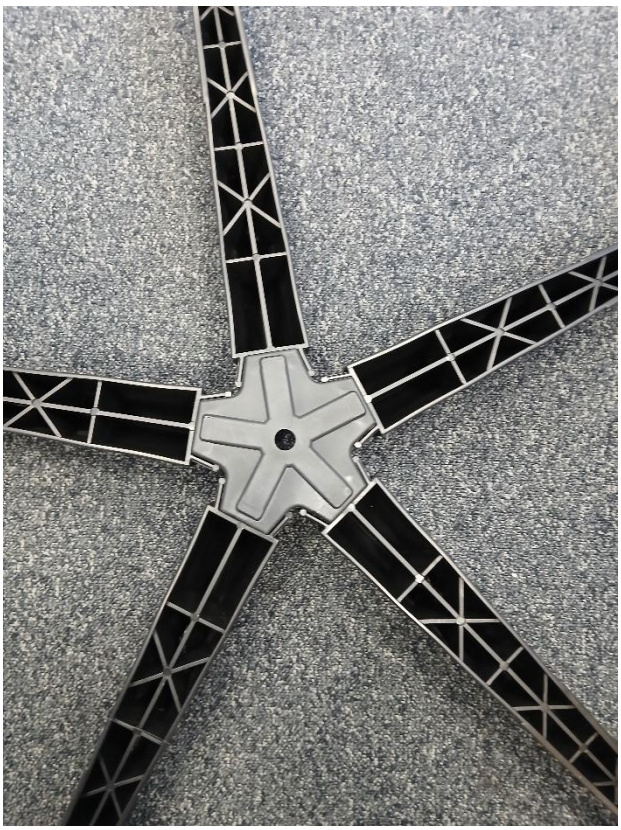

2. Slide in the crossbar mounting piece.





3. Unscrew the cap from the outer tube, slide it into the crossbar and tighten it from underneath as shown.

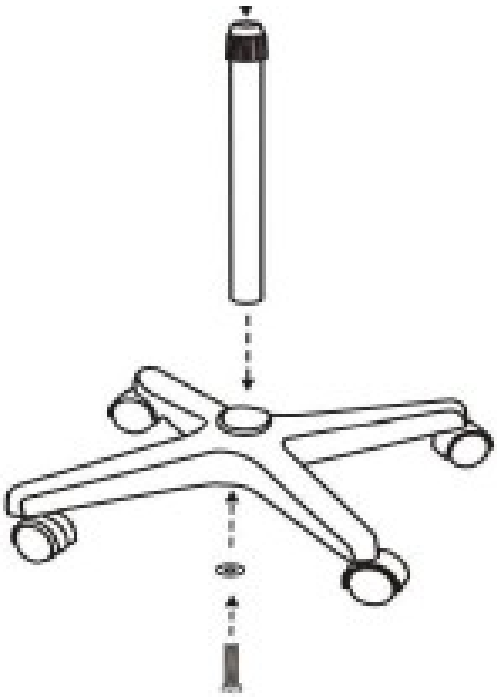



4. Insert the inner tube and use the knob to set the desired height.



5. Slide the dryer into the outer tube.





SAFETY MEASURES

1. The device is a professional equipment for use in beauty parlors. Operation of the device only by qualified cosmetic personnel to avoid undesirable consequences during treatment.
2. Do not disassemble the device or attempt to use it for purposes other than those indicated in this manual. All service and repair work must be performed only by an employee of an of an authorized service center.

3. Do not install or operate the device near liquids, wet places or with wet hands - so that no liquids get into the device.
4. Immediately unplug the device from the outlet and contact the authorized service in the following cases:

   A. liquid has entered the device,
   B. the device emits a strange odor, smoke or makes strange sounds,
   C. the power cord has been damaged,
   D. the device has been overturned or its housing has been damaged.

5. Do not put any objects on the cables. Do not install the device where someone may step on the power cord.
6. For safety purposes, unplug the power cord from the outlet each time you finish working with the device.
7. Do not insert anything into the opening of the device. If a foreign object gets into the hole, remove the cord from the outlet and contact the distributor or manufacturer.
8. Do not place the device on an unstable cart, shelf or vehicle. If dropped, the device may be damaged.
9. In order to guarantee the established useful life of the device, it is recommended to keep an interval of one minute before pressing the power button again (between switching on and off and vice versa).
10. The power supply must comply with the specifications on the nameplate. Otherwise, there is a risk of incorrect operation of the device its damage and even burning.

CAUTION:

1. In case of damage to the power cord or other malfunctions, contact an authorized service center, this will avoid danger.
2. This device can be used by children at least 8 years old and by people with reduced physical capabilities, mental capabilities and persons with inexperience and lack of familiarity with the equipment, if supervision or instruction on the use of the equipment in a safe manner is provided, so that the risks involved are understood.
3. The device is not intended for play by children. Do not allow children to play with the device.
4. Do not leave the appliance unattended when children or persons without sufficient knowledge in the use of the appliance are near it.
5. This electrical appliance is not a toy. Improper use of or contact with an electrical appliance may pose a health risk or lead to death, so use and store out of the reach of children.

DISPOSAL OF THE DEVICE



Dispose of used electrical appliances, fixtures and packaging to raw material reprocessing centers in accordance with environmental protection principles. Do not dispose of electrical appliances in household waste containers. Follow the rules for discarding this type of equipment. In order to protect the environment in accordance with Directive 2012/19/EC on waste electrical and electronic equipment, waste electrical equipment should be collected separately and then handed over to to collection points for used electronic and electrical equipment.

At the end of their useful life, as well as old devices contain full-value recyclable components, so they should be handed over for recycling. Therefore, they should be handed over to appropriate collection points.

STORAGE AND TRANSPORT

The device should be transported at a temperature in the range of (-)20°C to (+)40°C only in its original packaging. Store the device in a well-ventilated room and a relative humidity of no more than 90%. Operating temperature from (+)10°C to (+)40°C. During the storage and transportation processes, the device must not be thrown or dropped, exposed to mechanical shocks or atmospheric agents.
atmospheric conditions.