For service, contact the store where you purchased the device.

OPERATING INSTRUCTIONS

TOWEL WARMER WITH UV-C STERILIZER 16L RTD-16A / 130976, 130977



Rev. A/01/2026

Thank you for choosing our product.
Please read the user manual before first use and keep it for future reference.

Technical data	
Input voltage	220-240 V
Electrical power	200W
Rated frequency	50Hz
Type of insulation	Glass wool
Operating temperature	70°C ± 10˚C
Internal dimensions	36 x 15 x 27 cm
External dimensions	45 x 27 x 39 cm
Capacity	approx. 20 - 30 towels (16L)

UV bulb specifications	
Power	3W
Type of radiation	UV-C, wavelength 240 nm

Instructions for use

1. Place clean, damp, folded towels in the wire basket inside the device.
   The towels should be damp, but not wet. It may therefore be necessary to wring them out several times. Do not overload the basket or place towels directly in the device.
2. Place the basket in the heater and close the door tightly.
3. Press the "I" button; the indicator light will remain on when the device is turned on. When the internal temperature reaches the set level, the program automatically switches to heat retention mode. If
   If the temperature is lower than the set temperature, the heating mode will start.
4. Press the "O" button to turn off the device.

NOTE

The towel warmer is intended for professional use.
The product is equipped with a heating temperature control system and an overheating protection system. Check the water level in the drip tray regularly and empty it if necessary.

Maintenance

We recommend performing maintenance after each day of use. This will keep the product in good working order, ensure its long life, and proper operation.

1. Before cleaning, turn off the device, unplug it from the power outlet, and make sure that the warmer has cooled down.
2. Remove the basket from the warmer, take out the towels, and set it aside to dry.
3. Wipe the inside of the appliance with a soft, slightly damp cloth. Do not use strong detergents that could damage or scratch the surface. Mild soap can be used to clean the outside.
4. Remove the drip tray and empty it. Set the tray aside to dry.

Replacing the UV bulb

1. Before cleaning, turn off the device, unplug it from the power outlet, and make sure the heater has cooled down.
2. Remove all screws from the back panel, both on the outside and inside of the device.
3. Replace the bulb. The bulb specifications are listed in the technical data table above.

Device construction

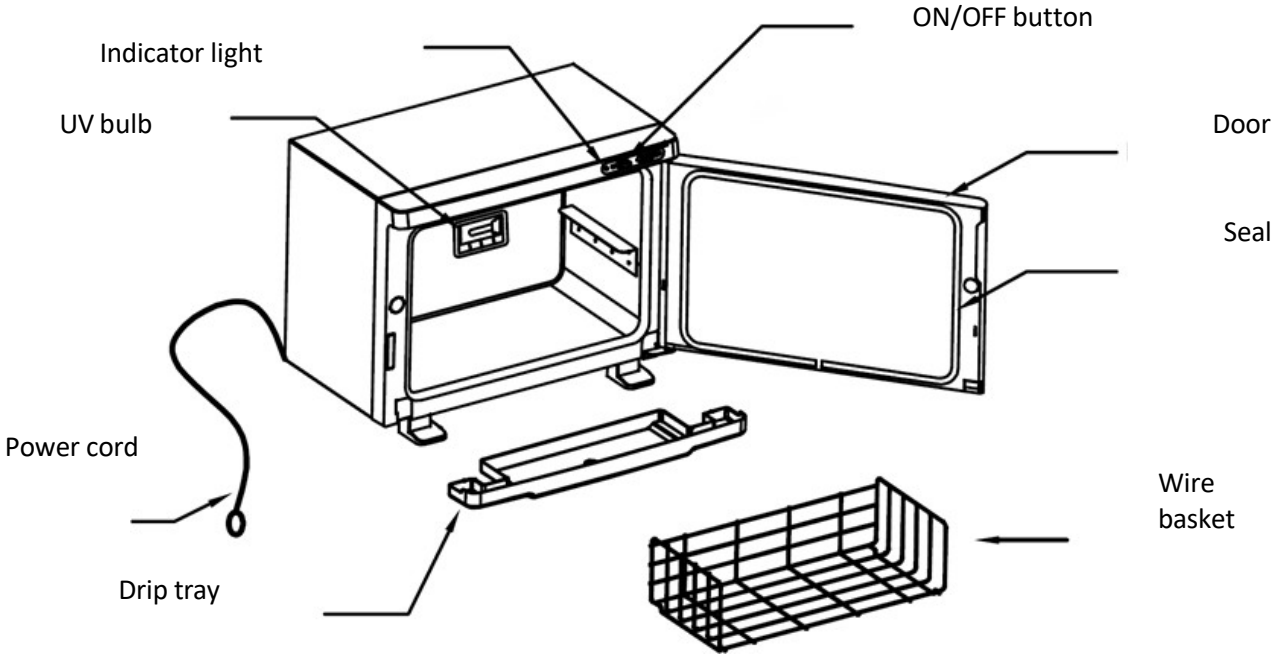

REMEMBER TO BE EXTRA CAREFUL, AS THE WIRE BASKET AND INTERNAL SURFACES MAY BE HOT. ALWAYS USE PROTECTIVE GLOVES TO AVOID BURNS.

Recommendations:

1. Ensure that you install the appliance on a flat and stable surface to reduce the risk of it falling and being damaged.
2. Never leave the device unattended while it is plugged in.
3. Use the device in accordance with the intended use described in the manual.
4. Never use this device if the cord or plug is damaged.
5. Do not use the device if it is not working properly or if it has been dropped, damaged, or fallen into water.
6. Do not pull directly on the cord to remove the plug from the outlet.
7. This product is for indoor use only. Do not expose it to direct weather conditions.
8. Clean the device periodically to prevent dirt buildup. It is best to clean the device with a damp cloth.
9. Do not wrap the power cord around the device.

Safety precautions:

1. The device is professional equipment for use in beauty salons. The device should only be operated by qualified beauty salon staff to avoid undesirable effects during treatment.

2. Do not disassemble the device or attempt to use it for purposes other than those specified in this user manual. All service and repair work must be performed exclusively by an authorized service technician.

3. Do not install or operate the device near liquids, wet areas, or with wet hands. Ensure that no liquids get into the device.

4. Immediately unplug the device and contact an authorized service center in the following cases: a) liquid has entered the device, b) the device emits a strange odor, smoke, or makes strange noises, c) the power cord has been damaged, d) the device has been knocked over or its casing has been damaged.

5. Do not place any objects on the cables. Do not install the device in places where someone could step on the power cord.
6. For safety reasons, unplug the power cord from the outlet after each use.
7. Do not place foreign objects inside the device. If an unwanted object gets inside, unplug the power cord from the power outlet and contact your distributor or manufacturer.
8. Do not place the device on an unstable cart, shelf, or vehicle. The device may be damaged if it falls.
9. To ensure the specified service life of the device, it is recommended to wait one minute before pressing the power button again (between switching on and off and vice versa).
10. The power supply must comply with the specifications on the nameplate. Otherwise, there is a risk of malfunction, damage, or even burning of the device.

CAUTION

1. In the event of damage to the power cord or other malfunctions, contact an authorized service center to avoid danger.
2. This device can be used by children aged 8 years and older, by persons with reduced physical and mental abilities, as well as by persons unfamiliar with how it works.
   equipment if they are provided with adequate supervision or instruction on how to use it safely and understand the risks involved.
3. Do not leave the device unattended when children or persons who do not have sufficient knowledge of how to use the device are in its vicinity.
4. The device is not intended for use by children. Do not allow children to play with the device.
5. This electrical device is not a toy. Incorrect use or contact with an electrical device may pose a risk to health or lead to death, so the device must be used and stored out of the reach of children.

Disposal of the device



In order to protect the environment, in accordance with Directive 2012/19/EC on waste electrical and electronic equipment, used electrical equipment must be collected separately and taken to collection points for waste electronic and electrical equipment. Follow the rules for disposing of this type of equipment and do not throw it into household waste containers.

At the end of their useful life, these devices still contain valuable recyclable components suitable for recycling, so they should be handed over for recycling to appropriate collection points.

Storage and transport

The device should be transported at temperatures between (–)20°C and (+)40°C, exclusively in its original packaging. It should be stored in a well-ventilated room with relative humidity not exceeding 90%. Operating temperature range: (+)10°C to (+)40°C. During storage and transport, do not throw or drop the device, expose it to mechanical shocks or atmospheric factors.