For service, contact the store where you
purchased the device.

Instructions for use

Gabbiano Sylvia hairdressing washstand



Rev. A/08/2025

Dimensions:



Technical data:

- Power: 70W
- Voltage: 220V
- Frequency: 50Hz
- Actuator: electric
- Bowl material: ceramic
- Cover material: synthetic leather

Attention.

1. Check that the voltage corresponds to the specifications of the device.
2. Do not use your wet hand to connect or disconnect the power source.
3. Do not damage the wiring or tamper with the circuit.
4. Do not use a wet cloth to clean the power switch, plug and other electrical parts of the machine.
6. Ensure that children do not play near the washer without adult supervision.
7. Do not put your hand or foot in the crevices of the washer.
8. Make sure the plug is plugged in all the way so that it is fully inserted into the outlet, otherwise it may cause electric shock or fire due to overheating.
9. In case of abnormality or malfunction, immediately stop using and disconnect the power supply.

10. Do not expose the washer to direct sunlight.

11. Do not push or pull the washer on an uneven floor.

12. Do not stand on the washer.

14. Do not place the washer in wet places such as the bathroom to avoid electric shock or other malfunctions. The remote control should also be protected from contact with water.

15. Do not place the washer in areas where painting or varnishing work is taking place or oxygen is being used.

16. The device should not be used by people with physical limitations, sensory impairments, mental problems or inexperience.

17. If the plug is damaged, contact an authorized service technician.

18. People with osteoporosis or heart disease should not use the washer.

19. The power cable should be laid in such a way that people walking by will not trip and fall.

20. Unplug the power washer when not in use.

Installation:

1. Loosen the screws and remove the cover.

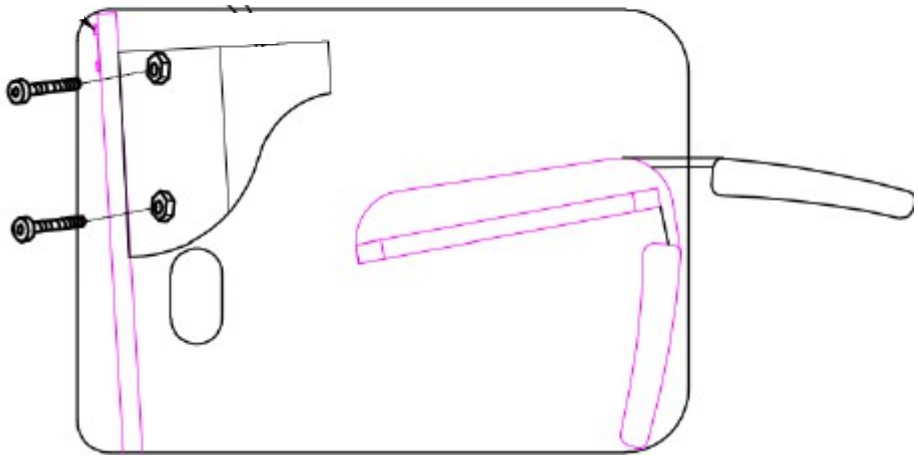

2. Once the base is in the correct position, attach it to the chair frame with screws on all four sides.

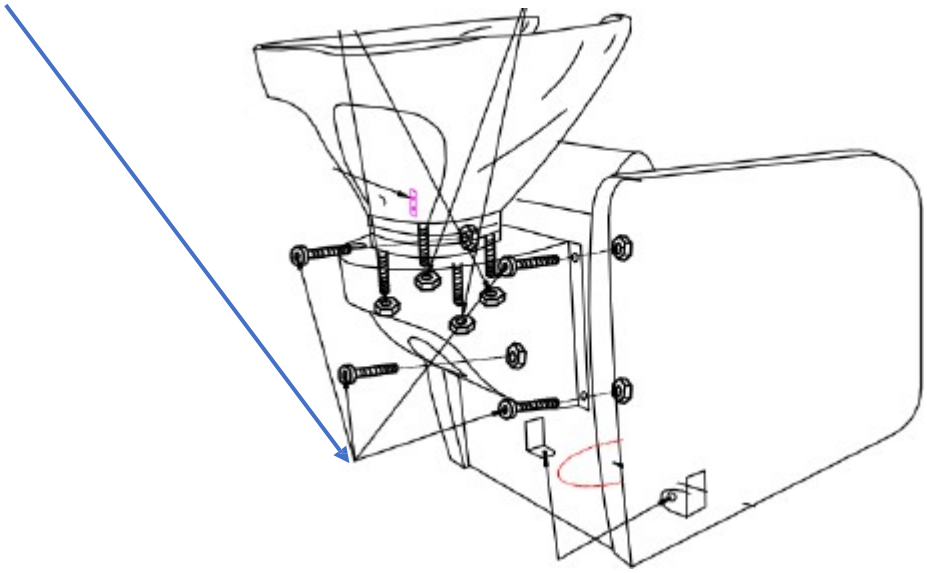

3. Insert the bowl into the base and adjust its position by gently moving it, then fix it with screws on the front and back.

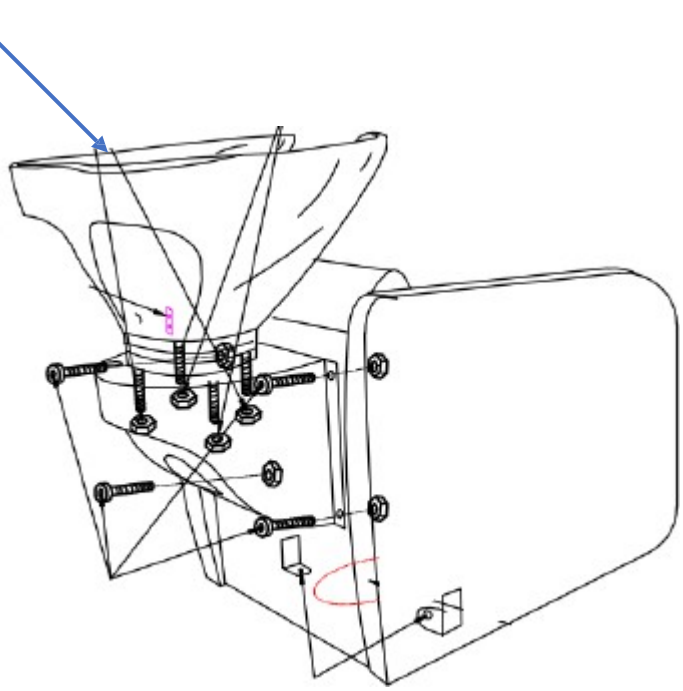

The drain must be installed before installing the bowl



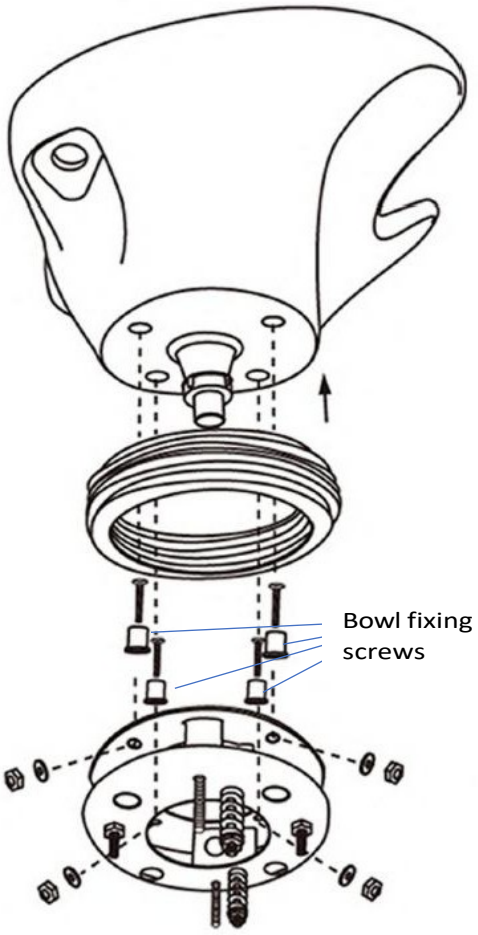

4. Tighten the two nuts on the left and right sides.

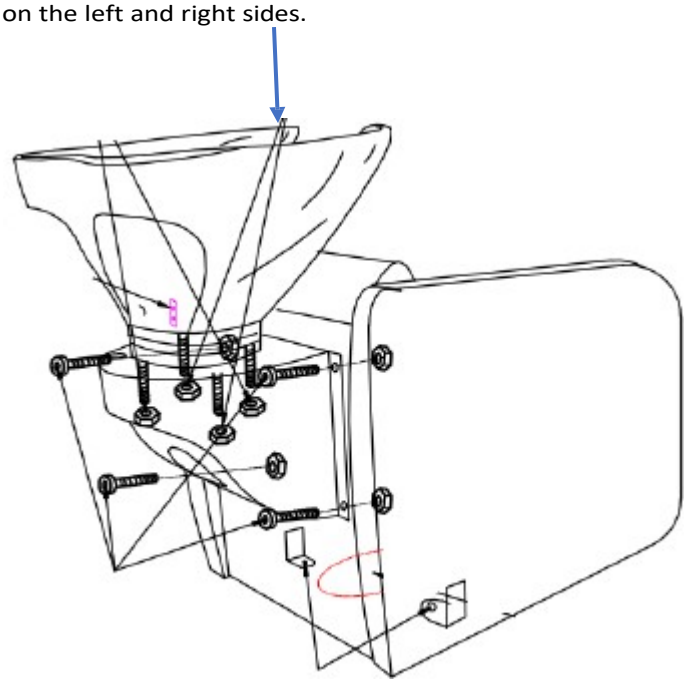

5. After installing the seat frame, connect the water hoses and electrical wires here.

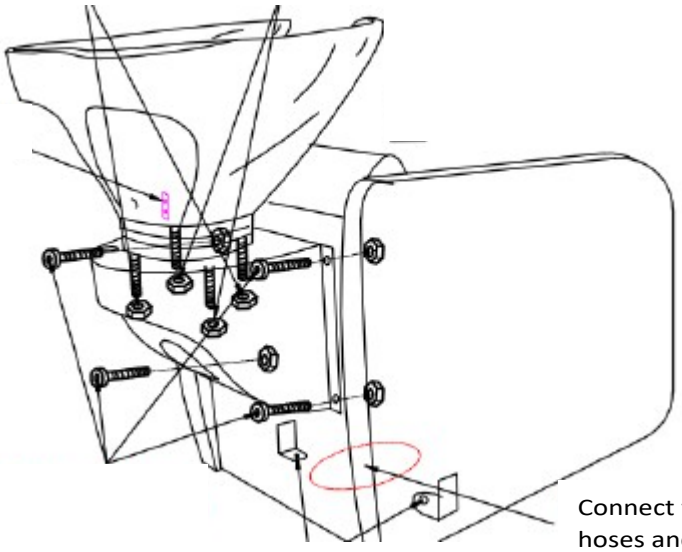

Connect the water hoses and electrical wires.

6. Secure the seat and adjust the backrest to a convenient position.

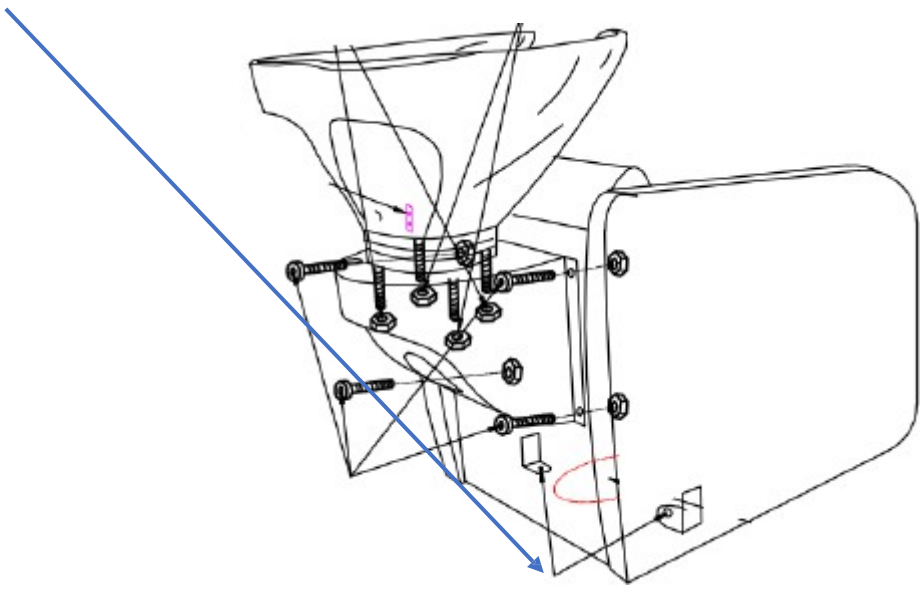

Water installation:

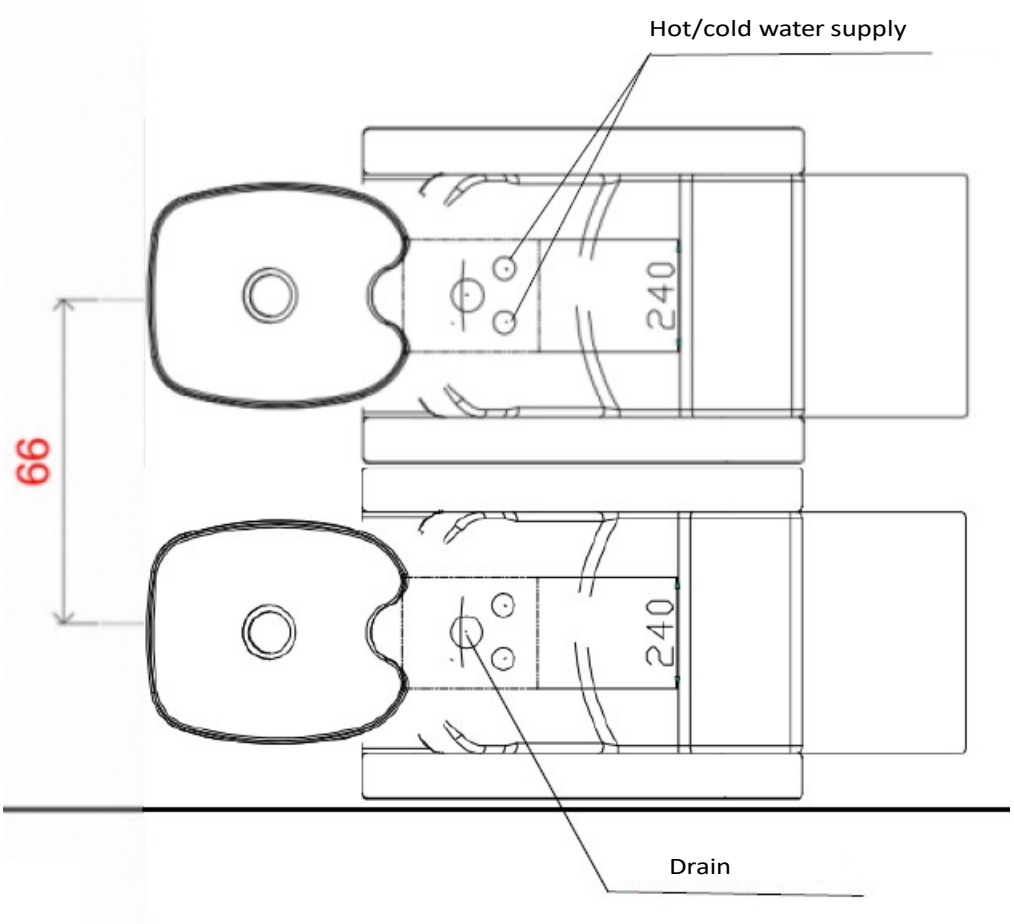

Tilt angle adjustment:

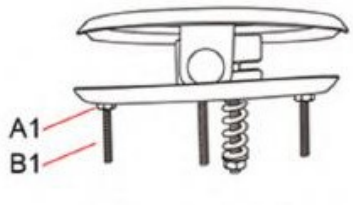

Loosen nut A1

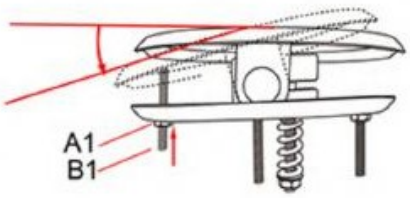

Tighten screw B1 up and tighten nut A1.

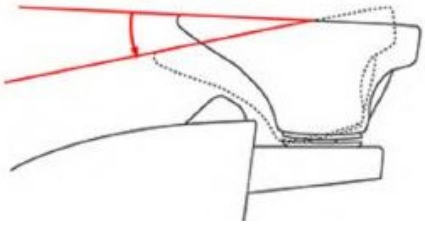

Adjust the bowl angle downward.

ceramic basin downwards

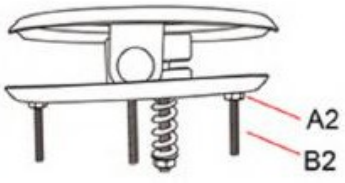

Loosen nut A2

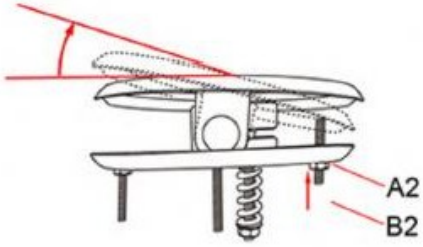

Tighten screw B2 upwards and tighten nut A2

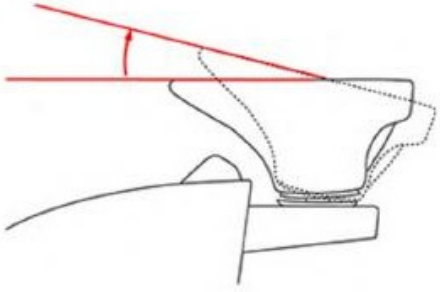

Adjust the angle of the bowl upwards

Tightening and loosening screws C1 and C2 in the same way also adjusts the bowl angle

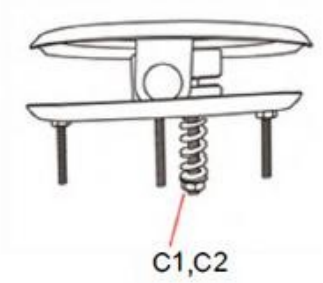

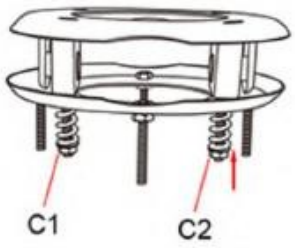

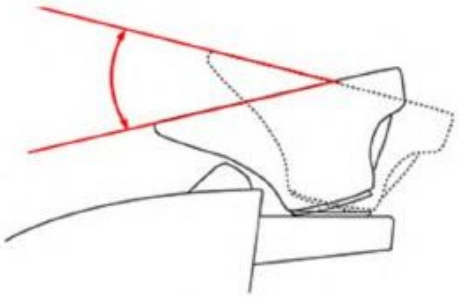

Maintenance:

1. Daily cleaning
   You can remove dust by using a soft dry towel.
2. Removing tough dirt
   As you know, it is difficult to remove more difficult dirt with an ordinary dry towel. In this case, you can use a soft towel moistened with diluted,
   neutral detergent to clean the surface first. Then you can wipe it with a dry towel.
3. Prohibit the use of gasoline, thinners, kerosene or other solvents.
   These substances can damage the skin or cause corrosion and damage to the appearance of the product.
4. Storage and usage conditions
   Do not expose the product to strong sunlight or moisture. This could cause damage to the product.
5. Permitted conditions of use
   The product can be used at a temperature of -5°C to 50°C and a humidity of 45% to 85%.

SAFETY MEASURES

1. The device is a professional equipment for use in beauty parlors. Operation of the device only by qualified cosmetic personnel allows avoiding undesirable consequences during the treatment.

2. Do not disassemble the device or attempt to use it for purposes other than those indicated in this manual. All servicing and repairs must be performed only by an authorized service technician.

3. Do not install or operate the device near liquids, wet places or with wet hands - so that no liquids get into the device.

4. Immediately unplug the device from the outlet and contact an authorized service in the following cases: a) liquid has gotten into the device, b) the device emits a strange smell, smoke or makes strange sounds, c) the power cord has been damaged, d) the device has been knocked over or its housing has been damaged.

5. Do not lay any objects on the cables. Do not install the device where someone may step on the power cord.

6. For safety purposes, unplug the power cord from the outlet each time you finish working with the device.

7. Do not insert anything into the opening of the device. If a foreign object gets into the hole, remove the cord from the outlet and contact the distributor or manufacturer.

8. Do not place the device on an unstable cart, shelf or vehicle. If dropped, the device may be damaged.

9. In order to guarantee the established useful life of the device, it is recommended to keep an interval of one minute before pressing the power button again (between switching on and off and vice versa).

10. The power supply must comply with the specifications on the nameplate. Otherwise, there is a risk of incorrect operation of the device its damage and even burning.

CAUTION:

1. In case of damage to the power cord or other malfunctions, contact an authorized service center - this will avoid danger.

2. This equipment may be used by children at least 8 years of age and by persons of diminished physical and mental capabilities and persons with inexperience and lack of familiarity with the equipment, if supervision or instruction on how to use the equipment in a safe manner is provided so that the associated risks are understood.

3. The equipment is not intended for play by children. Do not allow children to play with the equipment.

4. Do not leave the appliance unattended when children or persons without sufficient knowledge of the use of the appliance are in the vicinity.

5. This electrical appliance is not a toy. Improper use or contact with the electrical appliance may pose a health risk or lead to death, so use and store the appliance out of the reach of children.



DISPOSAL OF THE DEVICE

Dispose of used electrical appliances, fixtures and packaging to raw material reprocessing centers in accordance with environmental protection principles. Electrical appliances should not be disposed of in household waste containers. Follow the rules for discarding this type of equipment. In order to protect the environment in accordance with Directive 2012/19/EC concerning waste electrical and electronic equipment
Waste electrical and electronic equipment should be collected separately, and then handed over to collection points for waste electronic and electrical equipment.

At the end of their useful life, as well as old devices contain full-value recyclable components, so they should be handed over for reprocessing. Therefore, they should be handed over to appropriate collection points, as well as they can also be handed over to the.

STORAGE AND TRANSPORT

The device should be transported at a temperature in the range of (-) 20 °C to (+) 50 °C only in its original packaging. Store the device in a well-ventilated and relative humidity of no more than 75%. Operating temperature from (+) 10 °C to (+) 40 °C. During storage and transportation processes, the device must not be thrown or dropped, exposed to mechanical shocks or atmospheric agents.