For service, contact the store where you
purchased the device.

INSTRUCTIONS FOR USE

CD-4830 ultrasonic cleaner



Rev. A/03/2024

Technical data:

Voltage	220V - 240V 50Hz
Power	150W
Vibration frequency	36kHz
Dimensions	38.5 x 23.4 19.3 CM
Dimensions of the tank	25 x 17.4 x 7.8 cm
Tank capacity	3 l
Minimum liquid level	1,5 l
Maximum fluid level	2,5 l
Temperature settings	40 °C - 60 °C
Timer switch	1 - 30 min

- Unplug the unit before filling. Do not exceed the "MAX" line to avoid overfilling.
- Do not fill the tank with abrasive or corrosive chemicals. It may cause it to leak, resulting in damage.
- Do not use the washer if the cable or plug is damaged. If damaged, contact a service center for inspection and repair.
- Store the washer in a safe place.
- The washer should never be left unattended while plugged in.
- Do not use while bathing.
- Disconnect the washer after use immediately
- Do not immerse the washer in water to avoid electrocution
- Pour the water out through the water drain, never empty the water by tilting the washer.

STORAGE AND HANDLING



1. Do not turn on the washer without water inside. Turning on the washer without water may damage the washer.
2. Do not overload the washer with continuous operation. After 45 minutes of continuous operation, leave the washer idle for another 20 minutes.
3. Do not leave water in the washer permanently. Pour the water or solution out of the washer after use. Leaving water or solution in the washer for a long time can damage it.
4. Take care of the outside of the washer. Wipe off any residual water or solution immediately. Use a damp towel to clean the washer. Wipe dry after washing.

5. Do not expose the device to the sun for too long. Store the washer in a dry and cool place.

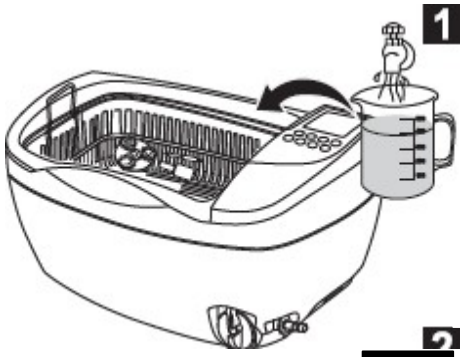

INSTRUCTIONS FOR USE

Open the lid, Put the products into the basket and then into the tank of the washer. Fill the tank with water. The water must cover the objects to be cleaned, but must not exceed the maximum liquid level.

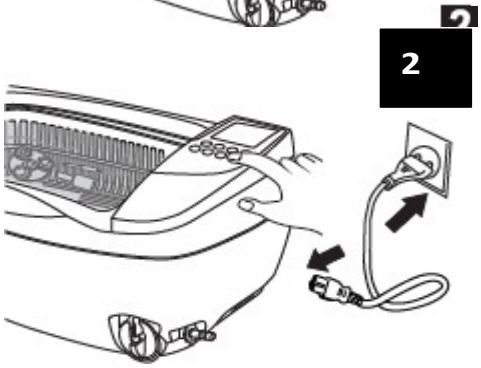

Put the lid on, and then connect the washer to the power supply. The display will show the default operating time of the device. If you want to change the time, press the time change button and the▽ button . The timer can be set from 1 to 30 minutes. The most commonly selected time modes are 5, 10, 15 minutes.



Press the ON/OFF button to start washing. The device will make a beep to signal the start of operation. The display will show the remaining running time. You can stop washing at any time by pressing the ON/OFF button.

The device has an overheating protection system. If the red light comes on, the device will not turn on. After about 20 minutes, the green light will come on, indicating that the device can be used again.



Choose one of the four cleaning modes.

a) If you need to increase the temperature, press TEMP and select one of the 5 possible temperatures. Press HEATER to start heating signaled by . When the unit reaches the selected temperature, the mark will disappear.

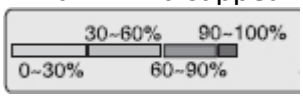

- The percentage of temperature reached will be displayed on the indicator.

b) When washing in solution, it is recommended to use the degassing function to speed up the process. Press the TIME button and set the time to 10 minutes,

then press the function button. The icon will light up , press the ON/OFF button to start degassing. It will last for 2 minutes, and

then normal washing will begin.

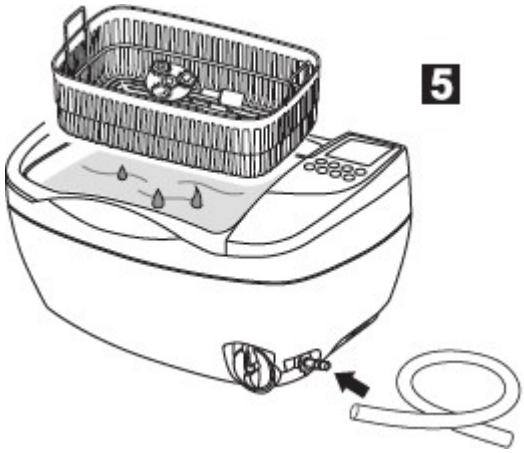

5. when you have finished working, turn off the device and disconnect it from the power supply. Open the lid and pull out the items. Connect the hose to the water drain, open the drain with the knob, drain the water and clean the device, then wipe it dry. Disconnect the hose and close the valve.



1. Ordinary washing

Place the items you want to clean in the basket and put it into the tank of the washer. Fill the tank with water. The water must cover the objects to be cleaned, but must not exceed the maximum liquid level. Put the lid on, and then connect the device to electricity. Press the TIME button to set the operating time (5-10minutes), and then ON/OFF to start cleaning.

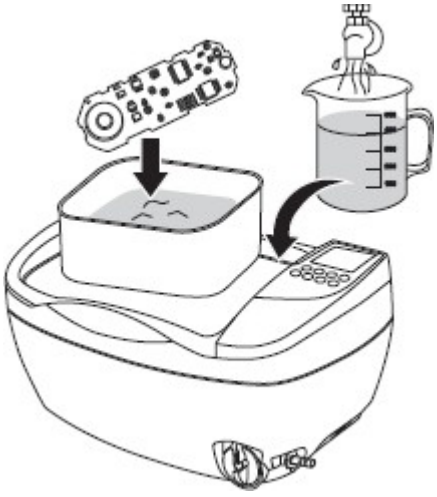

2. Intermediate cleaning

If items need to be washed in the cleaning solution, it is recommended to place them in the container instead of directly in the tank. Then follow the same procedure as for ordinary washing.

3. Advanced washing

(For heavily soiled items).

Large items can be placed directly in the tank, while smaller items are better put in the basket. Fill the tank with water. The water must cover the objects to be cleaned, but must not exceed the maximum liquid level. Then add 50 ml of cleaning solution and set the temperature to 45°C using the TEMP button. Then press the HEATER button and close the lid. Set the cleaning time to 15 minutes and turn the device on with the ON/OFF button. When finished, pour the water out of the device and fill it with clean water and run it for another 3 minutes to get rid of the detergent residue.

4. Special washing

(For silver or copper items that are heavily discolored)

Place the items in the basket and put it into the tank of the washer. Fill the tank with water. The water must cover the objects to be cleaned, but must not exceed the maximum liquid level. Then add a special cleaning solution suitable for cleaning silver. Put the lid on, and then connect the device to electricity. Set the temperature to 50°C and wait for the device to heat up. Then press h/min , to adjust the working time of the solution. 40 minutes or 1h is recommended. Then press TIME and set the time to 15 minutes, and the function button to start degassing. The icon will light up , press the ON/OFF button to start degassing. This will last for 2 minutes, and then normal washing will begin. When it's done, pour the water out of the machine and fill it with clean water and run it for another 3 minutes to get rid of the detergent residue.

Washer construction and accessories:

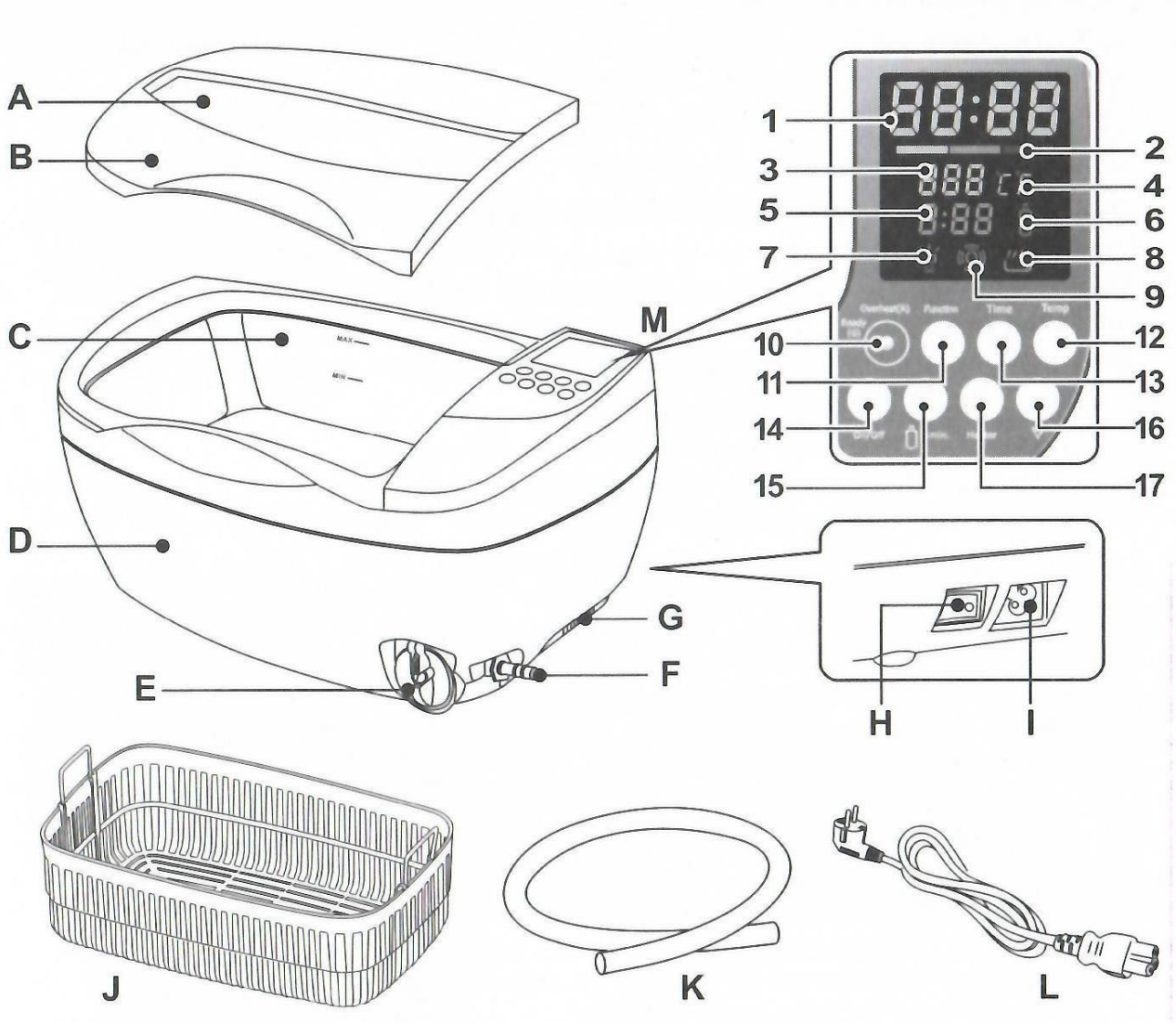

A. Viewing window
B. Lid
C. Tank
D. Housing
E. Drain knob
F. Water drain
G. Ventilation
H. On/off switch
I. Power cord socket
J. Plastic basket
K. Drain hose
L. Power cable
M. Control panel

Control panel and functions:

1. **Time display.** The time is counted the start of the washer.
2. **Temperature indicator**
   - Green light means reaching 0-30% of the set temperature
   - Orange light means reaching 30-60% of the set temperature
   - Red light means reaching 60-90% of the set temperature
   - A flashing red light means that the liquid is close to reaching 60-90% of the set temperature
   - All lights on means the set water temperature has been reached
3. **Display of set temperature.** Press the button to set one of 5 temperatures: 40°C/104°F - 45°C/113°F - 50°C/122°F - 55°C/131°F - 60°C/140°F
4. **°C°F** - indicates the unit of temperature
5. **Solution operating time.** Working time of the solution calculated in hours
6. **Solution working time indicator light.** When the Solution Run Time drops to zero, the light will blink, suggesting fluid replacement.

7. **Light of the degassing function.** Light on - function selected Light blinks - function in operation.
8. **Preheating function indicator light.** Light on indicates that the function is on
9. **Washing function light.** On means that the washer is operating in normal mode of operation
10. **Washer operation light:**

Green - washer ready for use

Red - overheating protection activated. Wait until the light turns green (20 minutes or more)

11. **Button to enable the degassing function.** Press to select the degassing function. Press the On/Off button to start it (duration - 2 minutes).

Degassing. In some cases, air (gas) bubbles may appear in the solution in the washer under the influence of chemical reactions. Gas bubbles impede the normal operation of the washer. Turning on the degassing function helps remove gas bubbles and thus improves the performance of the washer.

12. **Temperature change button.** Press the button to change the set temperature to the desired temperature.
13. **Time change button.** Press the button to set the desired time. Each press changes the time by 5 minutes.
14. **On/Off button.** When the washer is turned on with the H button (pictured), the washer is ready for use. Pressing the on/off button will start/stop the machine. The washer will automatically turn off when the time reaches 0:00.
15. **Solution time control button.** Each time the button is pressed, the time will be increased by 20 minutes. E.g. 1:20 means 1 hour and 20 minutes. The maximum possible time to be set is 9 hours 60 minutes.
16. **Time/temperature decrease button**
    - When setting the operating time (function 13) - pressing will reduce the time by 1 minute
    - When setting the temperature (function 12) - pressing will lower the temperature by 1 level
    - When setting the working time of the solution (function 15) - pressing will reduce the time by 20 minutes

17. **Button to enable heating.** Pressing will turn on the heating function. Pressing again will turn off the heating function. Preheating turns off automatically when the washer's operating time reaches 0:00

PRODUCTS NOT SUITABLE FOR WASHING IN AN ULTRASONIC CLEANER

- Fine jewelry (pearls, emerald, ivory items, beads, seashells, agate).
- Welded, coated and glued items
- Other items such as wood, coated glass, ceramic products, camera filters.

SAFETY MEASURES

1. The device is a professional equipment for use in beauty parlors. Operation of the device only by qualified cosmetology personnel avoids undesirable consequences during treatment.
2. Do not disassemble the device or attempt to use it for purposes other than those indicated in this manual. All servicing and repairs must be performed only by an authorized service technician.

3. Do not install or operate the device near liquids, wet places or with wet hands - so that no liquids get into the device.
4. Immediately unplug the device from the outlet and contact the authorized service in the following cases: a) liquid has entered the device, b) the device emits a strange smell, smoke or makes strange sounds, c) the power cord has been damaged, d) the device has been knocked over or its housing has been damaged.

5. Do not lay any objects on the cables. Do not install the device where someone may step on the power cord.
6. For safety purposes, unplug the power cord from the outlet each time you finish working with the device.
7. Do not insert anything into the opening of the device. If a foreign object gets into the hole, remove the cord from the outlet and contact the distributor or manufacturer.
8. Do not place the device on an unstable cart, shelf or vehicle. If dropped, the device may be damaged.
9. In order to guarantee the established useful life of the device, it is recommended to keep an interval of one minute before pressing the power button again (between switching on and off and vice versa).
10. The power supply must comply with the specifications on the nameplate. Otherwise, there is a risk of incorrect operation of the device its damage and even burning.

CAUTION:
1. In case of damage to the power cord or other malfunctions, contact an authorized service center - this will avoid danger.
2. This appliance can be used by children at least 8 years of age and by persons with reduced physical and mental capabilities and persons with inexperience and lack of familiarity with the equipment, if supervision or instruction on how to use the equipment in a safe manner is provided, so that the associated risks are understood.
3. The device is not intended for play by children. Do not allow children to play with the device.
4. Do not leave the appliance unattended when children or persons without sufficient knowledge in the use of the appliance are near it.
5. This electrical appliance is not a toy. Improper use or contact with the electrical appliance may pose a health risk or lead to death, so use and store the appliance out of the reach of children.



DISPOSAL OF THE DEVICE

Dispose of used electrical appliances, fixtures and packaging to raw material reprocessing centers in accordance with environmental protection principles. Electrical appliances should not be thrown into household waste containers. Follow the rules for discarding this type of equipment. In order to protect the environment in accordance with Directive 2012/19/EC on waste electrical and electronic equipment, waste electrical equipment should be collected separately and then handed over to collection centers for waste electronic and electrical equipment
electronic and electrical equipment.

At the end of their useful life, and old appliances contain full-value recyclable components, so they should be handed over for reprocessing. Therefore, they should be handed over to appropriate collection points.

STORAGE AND TRANSPORT

The device should be transported at temperatures between (-) 20 °C and (+) 50 °C only in its original packaging. Store the device in a well-ventilated area with a relative humidity of no more than 75%. Operating temperature from (+) 10 °C to (+) 40 °C. During storage and transportation processes, the device must not be thrown or dropped, exposed to mechanical shocks or atmospheric agents.