For service, contact the store where you purchased the device.

USER MANUAL

23L TOWEL WARMER WITH UV-C STERILIZER RTD-23A / 130978, 130979



Rev. A/01/2026

Thank you for choosing our product.
Please read the user manual before first use and keep it for future reference.

Technical Specifications	
Input voltage	220–240 V
Power consumption	200 W
Rated frequency	50 Hz
Insulation type	Glass wool
Operating temperature	70°C ± 10°C
Internal dimensions	37 x 25 x 19 cm
External dimensions	45 x 36 x 29 cm
Capacity	approx. 20–30 towels (23 L)

UV bulb specifications	
Power	3W
Type of radiation	UV-C, wavelength 240 nm

WARNING

- The UV radiation emitted by the device is harmful to your health; therefore, you must turn off the device before opening the door to avoid exposing your eyes and skin to direct radiation.
- Exercise extreme caution, as the wire basket and internal surfaces may be hot. Always wear protective gloves to avoid burns.
- The towel warmer is intended for professional use.
- The product is equipped with a heating temperature control system and an overheating protection system.
- Check the water level in the drip tray regularly and empty it as needed.

Instructions for Use

1. Place clean, damp, and folded towels into the wire basket inside the unit.
   The towels should be damp, but not wet. You may therefore need to wring them out a few times.
   Do not overload the basket or place towels directly inside the unit.
2. Place the basket in the heater and close the door securely.
3. Press the “I” button; the indicator light will remain on when the unit is turned on. When the internal temperature reaches the set level, the program automatically switches to the keep-warm mode. If
   the temperature is lower than the set point, the heating mode will activate.
4. Press the “O” button to turn off the appliance.
   Before opening the door, be sure to turn off the appliance so that the UV lamp goes out.
5. Exercise extreme caution, as the wire basket and interior surfaces may be hot. Always wear protective gloves to avoid burns

Device Design

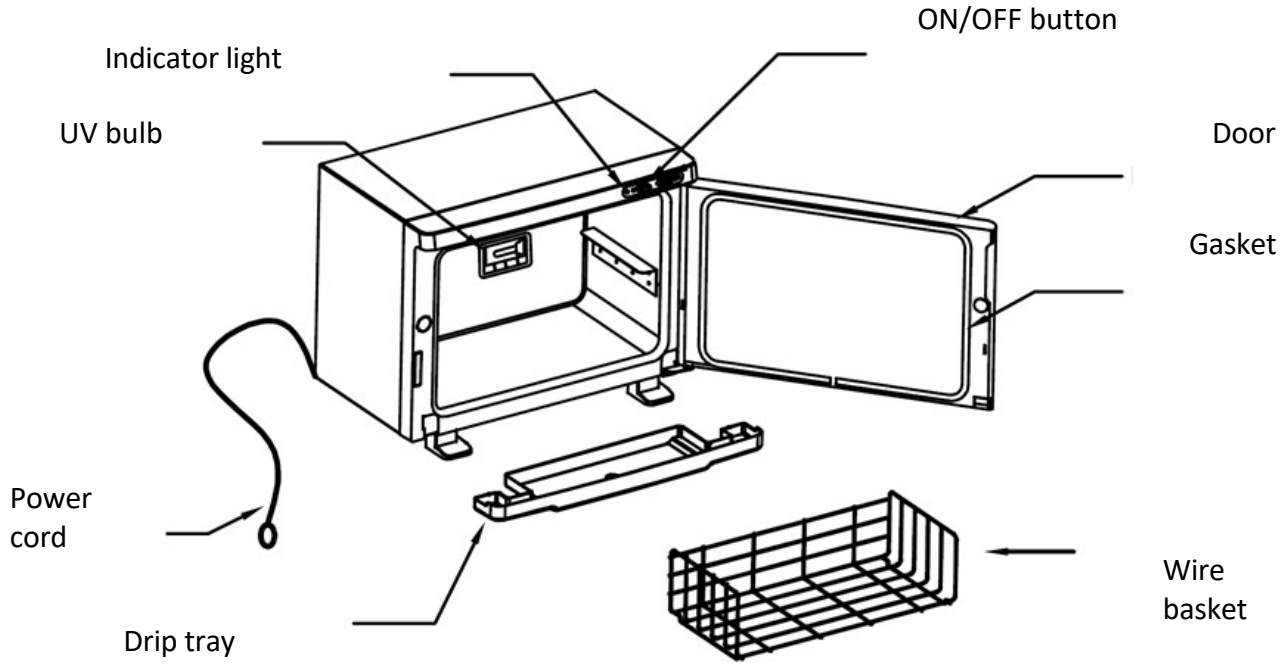

Maintenance

We recommend performing maintenance after each day of use. This will help keep the product in good working condition, ensure its long service life, and maintain proper operation.

1. Before cleaning, turn off the device, unplug it from the outlet, and make sure the heater has cooled down.
2. Remove the basket from the heater, take the towels out of it, and set it aside to dry.
3. Wipe the inside of the unit with a soft, slightly damp cloth. Do not use strong detergents that could damage or scratch the surface. You can use mild soap to clean the exterior.
4. Remove the drip tray and empty it. Set the tray aside to dry.

Replacing the UV Bulb

1. Before cleaning, turn off the device, unplug it from the outlet, and make sure the heater has cooled down.
2. Unscrew all the screws from the back panel, both those on the outside and inside of the unit.
3. Replace the bulb. The bulb specifications are listed in the technical data table above.

Recommendations:

1. Make sure you install the device on a flat, stable surface to reduce the risk of it falling and being damaged.
2. Never leave the device plugged in and unattended.
3. Use the appliance only for its intended purpose as described in the manual.
4. Never use this device if the cord or plug is damaged.
5. Do not use the device if it is not working properly or if it has been dropped, damaged, or submerged in water.
6. Do not pull directly on the cord to unplug the device from the outlet.
7. This product is for indoor use only. Do not expose it to direct weather conditions.
8. Clean the device periodically to prevent dirt buildup. It is best to clean the device with a damp cloth.
9. Do not wrap the power cord around the device.

Safety Precautions:

1. This device is professional equipment intended for use in beauty salons. To avoid undesirable effects during treatment, the device must be operated exclusively by qualified beauty professionals.
2. Do not disassemble the device or attempt to use it for purposes other than those specified in this user manual. All maintenance and repairs must be performed exclusively by an authorized service technician .
3. Do not install or operate the device near liquids, in wet areas, or with wet hands. Ensure that no liquids enter the device.
4. Immediately unplug the device from the outlet and contact the authorized service center in the following cases: a) liquid has entered the device, b) the device emits a strange odor, smoke, or makes unusual noises, c) the power cord has been damaged, d) the device has been knocked over or its housing has been damaged.
5. Do not place any objects on the cables. Do not install the device in locations where someone might step on the power cord.
6. For safety reasons, unplug the power cord from the outlet after each use of the device.
7. Do not place any foreign objects inside the device. If a foreign object gets inside, unplug the power cord from the outlet and contact the distributor or manufacturer.
8. Do not place the device on an unstable cart, shelf, or vehicle. If it falls, the device may be damaged.
9. To ensure the device's specified service life, it is recommended to wait one minute before pressing the power button again (between turning it on and off, and vice versa).
10. The power supply must comply with the specifications listed on the nameplate. Otherwise, there is a risk of the device malfunctioning, being damaged, or even catching fire.

CAUTION

1. In the event of damage to the power cord or other malfunctions, contact an authorized service center—this will help prevent hazards.
2. This device may be used by children aged 8 and older, by persons with reduced physical or mental capabilities, and by persons unfamiliar with how this equipment, provided they are given appropriate supervision or instruction on how to use it safely and understand the associated risks.
3. Do not leave the device unattended when children or people who lack sufficient knowledge of how to use the device are nearby.
4. The device is not intended for use as a toy by children. Do not allow children to play with the device.
5. This electrical device is not a toy. Improper use of or contact with the may pose a risk of injury or death; therefore, the device must be used and stored out of the reach of children.

Disposal of the device



To protect the environment, in accordance with Directive 2012/19/EC on waste electrical and electronic equipment, used electrical devices must be collected separately and taken to collection points for waste electronic and electrical equipment. Follow the guidelines for disposing of this type of equipment and do not place it in household waste bins.

At the end of their useful life, these devices still contain fully functional components that can be recycled; therefore, they should be sent for recycling to appropriate collection points

Storage and Transport

The device should be transported at temperatures ranging from (–)20°C to (+)40°C exclusively in its original packaging. It should be stored in a well-ventilated room with a relative humidity of no more than 90%. Operating temperature range: (+)10°C to (+)40°C. During storage and transport, do not throw or drop the device, or expose it to mechanical shocks or weather conditions.